RECORDED IN OFFICIAL RECORDS
INSTRUMENT # 2021184912 1 PG(S)

10/11/2021 11:02 AM
KAREN E. RUSHING
CLERK OF THE CIRCUIT COURT
SARASOTA COUNTY, FLORIDA
SIMPLIFILE Receipt # 2753149

Permit Number
Parcel ID Number 0088090059

# NOTICE OF COMMENCEMENT

State of Florida
County of Sarasota

THE UNDERSIGNED hereby gives notice that improvements will be made to certain real property, and in accordance with Section 713.13 of the Florida Statutes, the following information is provided in this NOTICE OF COMMENCEMENT.

1. **Description of property (*legal description*):** Lot 2 Blk Z Sun Haven Unit 3
   a) Street (*job*) Address: 5669 Brooklyn Ave, Sarasota, Fl. 34231
2. **General description of improvements:** Replace Size for Size Windows
3. **Owner Information or Lessee information if the Lessee contracted for the improvement:**
   a) Name and address: Lewis Hirtzel 5669 Brooklyn Ave, Sarasota, Fl. 34231
   b) Name and address of fee simple titleholder (if different than Owner listed above)
   c) Interest in property: Owner
4. **Contractor Information**
   a) Name and address: Weather Tite Windows 2119 W. Columbus Dr. Tampa, FL 33607
   b) Telephone No.: 813-908-0131 Fax No.: (optional) 813-908-0134
5. **Surety** (if applicable, a copy of the payment bond is attached)
   a) Name and address: N/A
   b) Telephone No.:
   c) Amount of Bond: $
6. **Lender**
   a) Name and address: N/A
   b) Telephone No.:
7. **Persons within the State of Florida designated by Owner** upon whom notices or other documents may be served as provided by Section 713.13 (1) (a) 7., Florida Statutes:
   a) Name and address: N/A
   b) Telephone No.:
8. a. **In addition to himself or herself, Owner designates** Fax No.: (optional)
   to receive a copy of the Lienor's Notice as provided in Section 713.13 (1) (b), Florida Statutes. of
   b) Phone Number of Person or entity designated by Owner: N/A
9. **Expiration date of notice of commencement** (the expiration date may not be before the completion of construction and final payment to the contractor, but will be 1 year from the date of recording unless a different date is specified): ,20

**WARNING TO OWNER: ANY PAYMENTS MADE BY THE OWNER AFTER THE EXPIRATION OF THE NOTICE OF COMMENCEMENT ARE CONSIDERED IMPROPER PAYMENTS UNDER CHAPTER 713, PART I, SECTION 713.13, FLORIDA STATUTES, AND CAN RESULT IN YOUR PAYING TWICE FOR IMPROVEMENTS TO YOUR PROPERTY. A NOTICE OF COMMENCEMENT MUST BE RECORDED AND POSTED ON THE JOB SITE BEFORE THE FIRST INSPECTION. IF YOU INTEND TO OBTAIN FINANCING, CONSULT WITH YOUR LENDER OR AN ATTORNEY BEFORE COMMENCING WORK OR RECORDING YOUR NOTICE OF COMMENCEMENT.**

Under penalty of perjury, I declare that I have read the foregoing notice of commencement and that the facts stated therein are true to the best of my knowledge and belief.

x Lewis W. Hirtzel
(Signature of Owner or Lessee, or Owner's or Lessee's (Authorized Officer/Director/Partner/Manager)

Lewis William Hirtzel
(Print Name and Provide Signatory's Title/Office)

The foregoing instrument was acknowledged before me this 4th day of May ,20 21
by Lewis Hirtzel as owner (type of authority, e.g. officer, trustee, attorney in fact)
for Weather Tite Windows (Name of Person), as Contractor (type of authority,...e.g. officer, trustee, attorney in fact)
for Lewis Hirtzel (name of party on behalf of whom instrument was executed).

Personally Known ☐ Produced ID ☑
Type of ID DL

Notary Signature
Print name Rose Mills

NOTARY PUBLIC STATE OF FLORIDA
Rose Marie Mills
Comm.#HH058183
Expires: Nov. 7, 2024
Bonded Thru Aaron Notary

Replace S/S impact windows

# WeatherTite Measure Sketch Sheet

Customer Name/Number Hirtzel F22227

Product Approval NOA: 20-0406.01, 20-0401.03, 20-0401.16

Exposure _____

Size for Size Replacement: (Yes) No

W x H

13 - windows

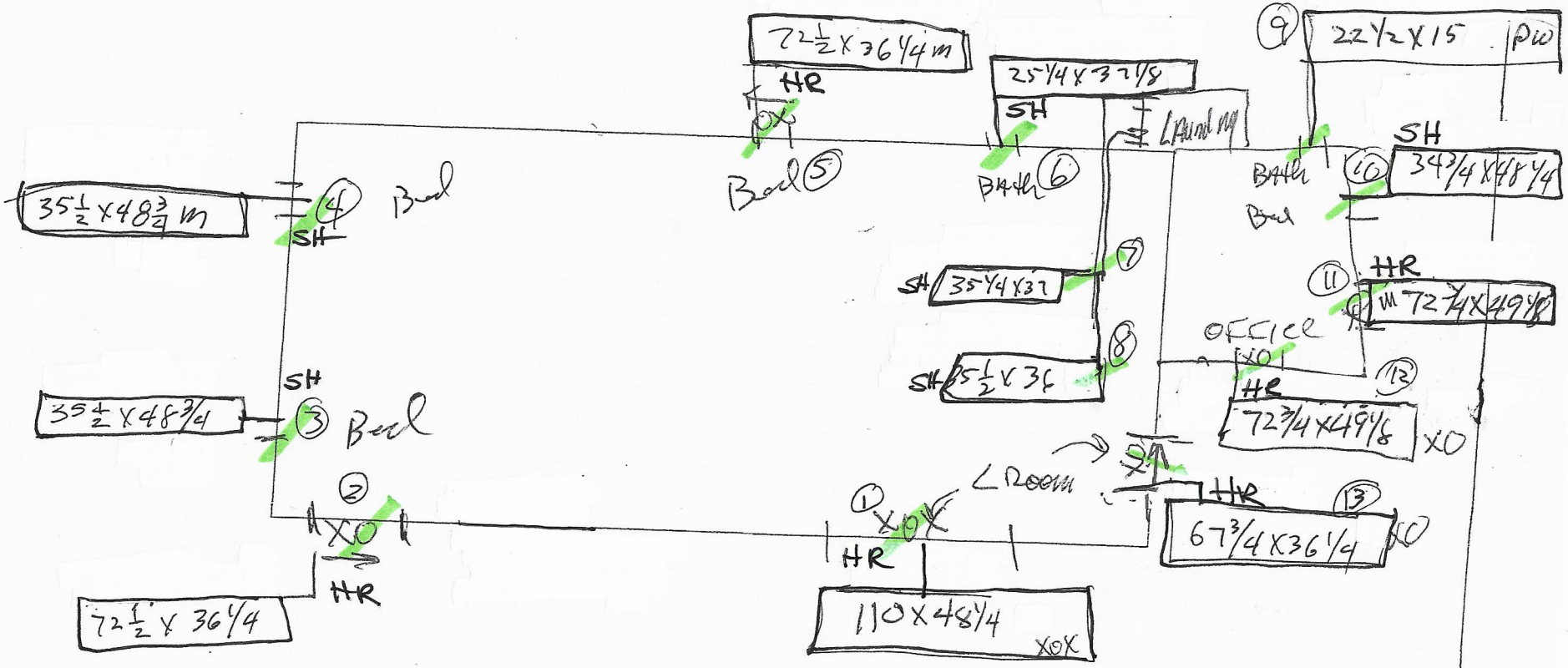

# NFRC Report

www.pgtwindows.com

**Quote #** 6725131
**PO Number:** F22227 Hirtzel
**Job Name:** F22227 Hirtzel
**Job Address:**

| Line # | Item Description | Quantity | Location |
|---|---|---|---|
| 0001 (1.00) | **HR5510** VINYL HORIZONTAL ROLLER 5510 110.X48.25,5/8" FL,W,7/8 LIG,CL,ARG,ES Max,NO GRID,XOX,1/4-1/2-1/4,1816K-BOXED,SWEEP | **Ordered:** 1.00 | **LIVING** |
| | Certification Type: MIAMI<br>Dealer Package: NONE<br>Unit Configuration: XOX<br>Size Selection: CUSTOM<br>Width: 110.0000<br>Actual Size: 110 X 48 1/4<br>Wood Frame Opening: 110 1/4 X 48 1/2<br>Frame Color: W - White<br>Glass Type: 1/8" - 5/16"<br>Glass Makeup: LIA207AA5<br>Does unit need to meet Turtle Code: NO<br>Low E: ENERGY SHIELD MAX<br>Privacy Glass: NONE - NONE<br>Reinf. Upgrade: NONE - None<br>Screen Frame Type: EXTRUDED<br>Window Opening Control Device: N<br>Upgrade Hardware Finish: N<br>Boxing Options: BS - Box Screen<br>CAR#: 20-0406.01<br>NegativeDesignPressure: 50.0000<br>~~EnergyStar~~: 123.0000<br>UF: 0.2900<br>VT: 0.4700 | | NOA Selection: 20-0406.01<br>Frame Type: .625FLANGE<br>Vent Configuration: 1/4.1/2.1/4<br>Size Ref: ACTUAL<br>Height: 48 1/4<br>Rough Masonry Opening: 111 3/4 X 49 1/4<br>Egress Opening: 25 13/16 X 43 5/16 SQFT 7.7637<br>Glass Family: LI - Laminated Insulating<br>Interlayer Type: PVB090<br>Glass: 7/8" LIG (1/8 AN - 7/16 ARG -5/16 AN/AN<br>Glass Color: CL - CLEAR<br>Argon Gas: ARGON<br>Grid Type: NONE - NO Grid<br>Screen Type: 1816K - 1816 Charcoal<br>Vent Latch: N<br>Lock Type: SWEEP - Sweep Latch<br>Anchor Group: C.HR54.55<br>Acc Glass Breakage: N<br>PositiveDesignPressure: 50.0000<br>PANumber: FL242<br>~~CondensationResistance~~: 59.0000<br>SolarHeatGainCoeff: 0.2100<br>VTCOG: 0.6300 |
| 0002 (2.00) | **HR5510** VINYL HORIZONTAL ROLLER 5510 72.5X36.25,5/8" FL,W,7/8 LIG,CL,ARG,ES Max,NO GRID,XO,EQUAL,1816K-BOXED,SWEEP | **Ordered:** 2.00 | **BEDS 2 AND 3** |
| 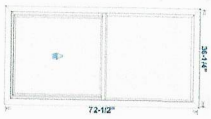 | Certification Type: MIAMI<br>Dealer Package: NONE<br>Unit Configuration: XO<br>Size Selection: CUSTOM<br>Width: 72 1/2<br>Actual Size: 72 1/2 X 36 1/4<br>Wood Frame Opening: 72 3/4 X 36 1/2<br>Frame Color: W - White<br>Glass Type: 1/8" - 5/16"<br>Glass Makeup: LIA207AA5<br>Does unit need to meet Turtle Code: NO<br>Low E: ENERGY SHIELD MAX<br>Privacy Glass: NONE - NONE<br>Reinf. Upgrade: NONE - None<br>Screen Frame Type: EXTRUDED<br>Window Opening Control Device: N<br>Upgrade Hardware Finish: N<br>Boxing Options: BS - Box Screen<br>CAR#: 20-0406.01<br>NegativeDesignPressure: 50.0000<br>~~EnergyStar~~: 123.0000<br>UF: 0.2900<br>VT: 0.4700 | | NOA Selection: 20-0406.01<br>Frame Type: .625FLANGE<br>Vent Configuration: EQUAL<br>Size Ref: ACTUAL<br>Height: 36 1/4<br>Rough Masonry Opening: 74 1/4 X 37 1/4<br>Egress Opening: 31 5/16 X 31 5/16 SQFT 6.8011<br>Glass Family: LI - Laminated Insulating<br>Interlayer Type: PVB090<br>Glass: 7/8" LIG (1/8 AN - 7/16 ARG -5/16 AN/AN<br>Glass Color: CL - CLEAR<br>Argon Gas: ARGON<br>Grid Type: NONE - NO Grid<br>Screen Type: 1816K - 1816 Charcoal<br>Vent Latch: N<br>Lock Type: SWEEP - Sweep Latch<br>Anchor Group: C.HR54.55<br>Acc Glass Breakage: N<br>PositiveDesignPressure: 50.0000<br>PANumber: FL242<br>~~CondensationResistance~~: 59.0000<br>SolarHeatGainCoeff: 0.2100<br>VTCOG: 0.6300 |
| 0003 | **SH5500** VINYL SINGLE HUNG 5500 | **Ordered:** | **BEDS 2 AND 3** |

| | | | |
|---|---|---|---|
| (3.00) | 35.5X48.75X.,STD,5/8" FL,W,EQUAL,7/8 LIG,CL,ARG,ES Max,NO GRID,DBL,SWEEP,1816K-BOXED,CMFRT LFT HNDL | 2.00 | |

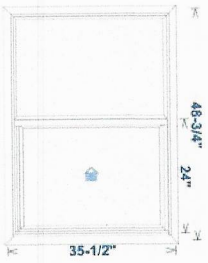


Certification Type: MIAMI
Dealer Package: NONE
Vent Configuration: EQUAL
Size Selection: CUSTOM
Width: 35 1/2
Actual Size: 35 1/2 X 48 3/4
Wood Frame Opening: 35 3/4 X 49
Frame Color: W - White
Glass Family: LI - Laminated Insulating
Glass Makeup: LIA207AA5
Does unit need to meet Turtle Code: NO
Low E: ENERGY SHIELD MAX
Privacy Glass: NONE - NONE
Reinf. Upgrade: NONE - None
Screen Frame Type: EXTRUDED
WOCD: N
Upgrade Hardware Finish: N
Lift Rail: N
Anchor Group: C.HU54.55
Acc Glass Breakage: N
CAR#: 20-0401.03
NegativeDesignPressure: 50.0000
EnergyStar: 123.0000
UF: 0.2900
VT: 0.4800

NOA Selection: 20-0401.03
Frame Type: .625FLANGE
Window Style: STD
Size Ref: ACTUAL
Height: 48 3/4
Rough Masonry: 37 1/4 X 49 3/4
Egress Opening: 31 1/4 X 19 3/4 (4.2795 SQFT)
Balance Type: CONSTANT
Interlayer Type: PVB090
Glass: 7/8" LIG (1/8 AN - 7/16 ARG -5/16 AN/AN
Glass Color: CL - CLEAR
Argon Gas: ARGON
Grid Type: NONE - NO Grid
Screen Type: 1816K - 1816 Charcoal
Vent Latch: N
Lock Type: SWEEP - Sweep Latch
Comfort Lift: Y
Lock Quantity: 2.0000
Boxing Options: BS - Box Screen
Vent Ht: 24.0180
PositiveDesignPressure: 50.0000
PANumber: FL-239
CondensationResistance: 59.0000
SolarHeatGainCoeff: 0.2100
VTCOG: 0.6300

| | | | |
|---|---|---|---|
| 0004 (4.00) | **SH5500** VINYL SINGLE HUNG 5500 25.25X37.125X.,STD,5/8" FL,W,EQUAL,7/8 TLIG,CL,ARG,ES Max,OB,NO GRID,DBL,SWEEP,1816K-BOXED,CMFRT LFT HNDL | **Ordered:** 1.00 | **BATH 2** |

Certification Type: MIAMI
Dealer Package: NONE
Vent Configuration: EQUAL
Size Selection: CUSTOM
Width: 25 1/4
Actual Size: 25 1/4 X 37 1/8
Wood Frame Opening: 25 1/2 X 37 3/8
Frame Color: W - White
Glass Family: LI - Laminated Insulating
Interlayer Type: PVB090
Glass: 7/8" LIG (1/8 -TMP - 7/16 ARG-5/16 AN/AN
Glass Color: CL - CLEAR
Argon Gas: ARGON
Privacy Glass Location: UNIT
Reinf. Upgrade: NONE - None
Screen Frame Type: EXTRUDED
WOCD: N
Upgrade Hardware Finish: N
Lift Rail: N
Anchor Group: C.HU54.55
Acc Glass Breakage: N
CAR#: 20-0401.03
NegativeDesignPressure: 50.0000
EnergyStar: 123.0000
UF: 0.2900
VT: 0.4800

NOA Selection: 20-0401.03
Frame Type: .625FLANGE
Window Style: STD
Size Ref: ACTUAL
Height: 37 1/8
Rough Masonry: 27 X 38 1/8
Egress Opening: 21 X 13 15/16 (2.0281 SQFT)
Balance Type: CONSTANT
Tempered Location: UNIT
Glass Makeup: LIT207AA5
Does unit need to meet Turtle Code: NO
Low E: ENERGY SHIELD MAX
Privacy Glass: OB - OBSCURE
Grid Type: NONE - NO Grid
Screen Type: 1816K - 1816 Charcoal
Vent Latch: N
Lock Type: SWEEP - Sweep Latch
Comfort Lift: Y
Lock Quantity: 2.0000
Boxing Options: BS - Box Screen
Vent Ht: 18.2054
PositiveDesignPressure: 50.0000
PANumber: FL-239
CondensationResistance: 59.0000
SolarHeatGainCoeff: 0.2100
VTCOG: 0.6300

| | | | |
|---|---|---|---|
| 0005 (5.00) | **SH5500** VINYL SINGLE HUNG 5500 35.5X36.X.,STD,5/8" FL,W,EQUAL,7/8 LIG,CL,ARG,ES Max,NO GRID,DBL,SWEEP,1816K-BOXED,CMFRT LFT HNDL | **Ordered:** 1.00 | **LAUNDRY** |

Certification Type: MIAMI
Dealer Package: NONE
Vent Configuration: EQUAL
Size Selection: CUSTOM
Width: 35 1/2
Actual Size: 35 1/2 X 36
Wood Frame Opening: 35 3/4 X 36 1/4
Frame Color: W - White
Glass Family: LI - Laminated Insulating
Glass Makeup: LIA207AA5
Does unit need to meet Turtle Code: NO
Low E: ENERGY SHIELD MAX
Privacy Glass: NONE - NONE

NOA Selection: 20-0401.03
Frame Type: .625FLANGE
Window Style: STD
Size Ref: ACTUAL
Height: 36.0000
Rough Masonry: 37 1/4 X 37
Egress Opening: 31 1/4 X 13 3/8 (2.896 SQFT)
Balance Type: CONSTANT
Interlayer Type: PVB090
Glass: 7/8" LIG (1/8 AN - 7/16 ARG -5/16 AN/AN
Glass Color: CL - CLEAR
Argon Gas: ARGON
Grid Type: NONE - NO Grid

Privacy Glass: NONE - NONE
Reinf. Upgrade: NONE - None
Screen Frame Type: EXTRUDED
WOCD: N
Upgrade Hardw are Finish: N
Lift Rail: N
Anchor Group: C.HU54.55
Acc Glass Breakage: N
CAR#: 20-0401.03
NegativeDesignPressure: 50.0000
EnergyStar: 123.0000
UF: 0.2900
VT: 0.4800

Grid Type: NONE - NO Grid
Screen Type: 1816K - 1816 Charcoal
Vent Latch: N
Lock Type: SWEEP - Sw eep Latch
Comfort Lift: Y
Lock Quantity: 2.0000
Boxing Options: BS - Box Screen
Vent Ht: 17.6429
PositiveDesignPressure: 50.0000
PA Number: FL-239
CondensationResistance: 59.0000
SolarHeatGainCoeff: 0.2100
VTCOG: 0.6300

| | | | |
|---|---|---|---|
| **0006 (6.00)** | **SH5500** VINYL SINGLE HUNG 5500 35.25X37.X.,STD,5/8" FL,W,EQUAL,7/8 LIG,CL,ARG,ES Max,NO GRID,DBL,SWEEP,1816K-BOXED,CMFRT LFT HNDL | **Ordered:** 1.00 | **LAUNDRY** |

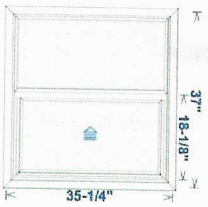


Certification Type: MIAMI
Dealer Package: NONE
Vent Configuration: EQUAL
Size Selection: CUSTOM
Width: 35 1/4
Actual Size: 35 1/4 X 37
Wood Frame Opening: 35 1/2 X 37 1/4
Frame Color: W - White
Glass Family: LI - Laminated Insulating
Glass Makeup: LIA207AA5
Does unit need to meet Turtle Code: NO
Low E: ENERGY SHIELD MAX
Privacy Glass: NONE - NONE
Reinf. Upgrade: NONE - None
Screen Frame Type: EXTRUDED
WOCD: N
Upgrade Hardw are Finish: N
Lift Rail: N
Anchor Group: C.HU54.55
Acc Glass Breakage: N
CAR#: 20-0401.03
NegativeDesignPressure: 50.0000
EnergyStar: 123.0000
UF: 0.2900
VT: 0.4800

NOA Selection: 20-0401.03
Frame Type: .625FLANGE
Window Style: STD
Size Ref: ACTUAL
Height: 37.0000
Rough Masonry: 37 X 38
Egress Opening: 31 X 13 7/8 (2.9805 SQFT)
Balance Type: CONSTANT
Interlayer Type: PVB090
Glass: 7/8" LIG (1/8 AN - 7/16 ARG -5/16 AN/AN
Glass Color: CL - CLEAR
Argon Gas: ARGON
Grid Type: NONE - NO Grid
Screen Type: 1816K - 1816 Charcoal
Vent Latch: N
Lock Type: SWEEP - Sw eep Latch
Comfort Lift: Y
Lock Quantity: 2.0000
Boxing Options: BS - Box Screen
Vent Ht: 18.1429
PositiveDesignPressure: 50.0000
PA Number: FL-239
CondensationResistance: 59.0000
SolarHeatGainCoeff: 0.2100
VTCOG: 0.6300

| | | | |
|---|---|---|---|
| **0007 (7.00)** | **PW5520** PW5520 VINYL PICTURE WINDOW 22.5X15.,5/8" FL,W,7/8 TLIG,CL,ARG,ES Max,OB,OUTSIDE GLZ,NO GRID | **Ordered:** 1.00 | **BATH 1** |

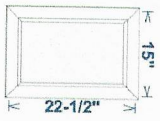


Certification Type: MIAMI
Dealer Package: NONE
Size Selection: CUSTOM
Width: 22.5000
Actual Size: 22 1/2 X 15
Wood Frame Opening: 22 3/4 X 15 1/4
Glass Family: LI - Laminated Insulating
Interlayer Type: PVB090
Glass: 7/8" LIG (1/8 -TMP - 7/16 ARG-5/16 AN/AN
Glass Color: CL - CLEAR
Argon Gas: ARGON
Grid Type: NONE - NO Grid
Acc Glass Breakage: N
PositiveDesignPressure: 50.0000
PA Number: FL243
CondensationResistance: 61.0000
SolarHeatGainCoeff: 0.2300
VTCOG: 0.6300

NOA Selection: 20-0401.16
Frame Type: .625FLANGE
Size Ref: ACTUAL
Height: 15.0000
Rough Masonry Opening: 24 1/4 X 16
Frame Color: W - White
Tempered Location: UNIT
Glass Makeup: LIT207AA5
Does unit need to meet Turtle Code: NO
Low E: ENERGY SHIELD MAX
Privacy Glass: OB - OBSCURE
Boxing Options: N - None
CAR#: 20-0401.16
NegativeDesignPressure: 50.0000
EnergyStar: 1234.0000
UF: 0.2400
VT: 0.5300

| | | | |
|---|---|---|---|
| **0008 (8.00)** | **SH5500** VINYL SINGLE HUNG 5500 34.75X48.25X.,STD,5/8" FL,W,EQUAL,7/8 LIG,CL,ARG,ES Max,NO GRID,DBL,SWEEP,1816K-BOXED,CMFRT LFT HNDL | **Ordered:** 1.00 | **BED 1** |

Certification Type: MIAMI
Dealer Package: NONE
Vent Configuration: EQUAL
Size Selection: CUSTOM
Width: 34 3/4
Actual Size: 34 3/4 X 48 1/4

NOA Selection: 20-0401.03
Frame Type: .625FLANGE
Window Style: STD
Size Ref: ACTUAL
Height: 48 1/4
Rough Masonry: 36 1/2 X 49 1/4

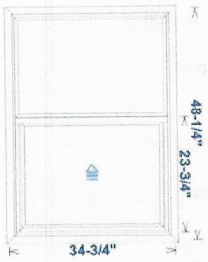


Actual Size: 34 3/4 X 48 1/4
Wood Frame Opening: 35 X 48 1/2
Frame Color: W - White
Glass Family: LI - Laminated Insulating
Glass Makeup: LIA207AA5
Does unit need to meet Turtle Code: NO
Low E: ENERGY SHIELD MAX
Privacy Glass: NONE - NONE
Reinf. Upgrade: NONE - None
Screen Frame Type: EXTRUDED
WOCD: N
Upgrade Hardware Finish: N
Lift Rail: N
Anchor Group: C.HU54.55
Acc Glass Breakage: N
CAR#: 20-0401.03
NegativeDesignPressure: 50.0000
EnergyStar: 123.0000
UF: 0.2900
VT: 0.4800

Rough Masonry: 36 1/2 X 49 1/4
Egress Opening: 30 1/2 X 19 1/2 (4.1238 SQFT)
Balance Type: CONSTANT
Interlayer Type: PVB090
Glass: 7/8" LIG (1/8 AN - 7/16 ARG -5/16 AN/AN
Glass Color: CL - CLEAR
Argon Gas: ARGON
Grid Type: NONE - NO Grid
Screen Type: 1816K - 1816 Charcoal
Vent Latch: N
Lock Type: SWEEP - Sweep Latch
Comfort Lift: Y
Lock Quantity: 2.0000
Boxing Options: BS - Box Screen
Vent Ht: 23.7680
PositiveDesignPressure: 50.0000
PANumber: FL-239
CondensationResistance: 59.0000
SolarHeatGainCoeff: 0.2100
VTCOG: 0.6300

| | | | |
|---|---|---|---|
| **0009 (9.00)** | **HR5510** VINYL HORIZONTAL ROLLER 5510<br>72.75X49.125,5/8" FL,W,7/8 LIG,CL,ARG,ES Max,NO GRID,XO,EQUAL,1816K-BOXED,SWEEP | **Ordered:** 1.00 | **OFFICE** |

Certification Type: MIAMI
Dealer Package: NONE
Unit Configuration: XO
Size Selection: CUSTOM
Width: 72 3/4
Actual Size: 72 3/4 X 49 1/8
Wood Frame Opening: 73 X 49 3/8
Frame Color: W - White
Glass Type: 1/8" - 5/16"
Glass Makeup: LIA207AA5
Does unit need to meet Turtle Code: NO
Low E: ENERGY SHIELD MAX
Privacy Glass: NONE - NONE
Reinf. Upgrade: NONE - None
Screen Frame Type: EXTRUDED
Window Opening Control Device: N
Upgrade Hardware Finish: N
Boxing Options: BS - Box Screen
CAR#: 20-0406.01
NegativeDesignPressure: 50.0000
EnergyStar: 123.0000
UF: 0.2900
VT: 0.4700

NOA Selection: 20-0406.01
Frame Type: .625FLANGE
Vent Configuration: EQUAL
Size Ref: ACTUAL
Height: 49 1/8
Rough Masonry Opening: 74 1/2 X 50 1/8
Egress Opening: 31 7/16 X 44 3/16 SQFT 9.6359
Glass Family: LI - Laminated Insulating
Interlayer Type: PVB090
Glass: 7/8" LIG (1/8 AN - 7/16 ARG -5/16 AN/AN
Glass Color: CL - CLEAR
Argon Gas: ARGON
Grid Type: NONE - NO Grid
Screen Type: 1816K - 1816 Charcoal
Vent Latch: N
Lock Type: SWEEP - Sweep Latch
Anchor Group: C.HR54.55
Acc Glass Breakage: N
PositiveDesignPressure: 50.0000
PANumber: FL242
CondensationResistance: 59.0000
SolarHeatGainCoeff: 0.2100
VTCOG: 0.6300

| | | | |
|---|---|---|---|
| **0010 (11.00)** | **HR5510** VINYL HORIZONTAL ROLLER 5510<br>72.75X49.125,5/8" FL,W,7/8 TLIG,UNIT,CL,ARG,ES Max,NO GRID,XO,EQUAL,1816K-BOXED,SWEEP | **Ordered:** 1.00 | **OFFICE *TEMPERED*** |

Certification Type: MIAMI
Dealer Package: NONE
Unit Configuration: XO
Size Selection: CUSTOM
Width: 72 3/4
Actual Size: 72 3/4 X 49 1/8
Wood Frame Opening: 73 X 49 3/8
Frame Color: W - White
Glass Type: 1/8" - 5/16"
Glass Makeup: LIT207AA5
Tempered Location: UNIT
Glass Color: CL - CLEAR
Argon Gas: ARGON
Grid Type: NONE - NO Grid
Screen Type: 1816K - 1816 Charcoal
Vent Latch: N
Lock Type: SWEEP - Sweep Latch
Anchor Group: C.HR54.55
Acc Glass Breakage: N
PositiveDesignPressure: 50.0000
PANumber: FL242
CondensationResistance: 59.0000
SolarHeatGainCoeff: 0.2100
VTCOG: 0.6300

NOA Selection: 20-0406.01
Frame Type: .625FLANGE
Vent Configuration: EQUAL
Size Ref: ACTUAL
Height: 49 1/8
Rough Masonry Opening: 74 1/2 X 50 1/8
Egress Opening: 31 7/16 X 44 3/16 SQFT 9.6359
Glass Family: LI - Laminated Insulating
Interlayer Type: PVB090
Glass: 7/8" LIG (1/8 -TMP - 7/16 ARG-5/16 AN/AN
Does unit need to meet Turtle Code: NO
Low E: ENERGY SHIELD MAX
Privacy Glass: NONE - NONE
Reinf. Upgrade: NONE - None
Screen Frame Type: EXTRUDED
Window Opening Control Device: N
Upgrade Hardware Finish: N
Boxing Options: BS - Box Screen
CAR#: 20-0406.01
NegativeDesignPressure: 50.0000
EnergyStar: 123.0000
UF: 0.2900
VT: 0.4700

VTCOG: 0.6300

| | | | |
|---|---|---|---|
| **0011 (10.00)** | **HR5510** VINYL HORIZONTAL ROLLER 5510 67.75X36.25,5/8" FL,W,7/8 TLIG,UNIT,CL,ARG,ES Max,NO GRID,XO,EQUAL,1816K-BOXED,SWEEP | **Ordered:** 1.00 | **LIIVNG** |

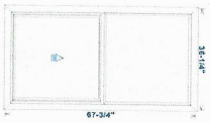


Certification Type: MIAMI
Dealer Package: NONE
Unit Configuration: XO
Size Selection: CUSTOM
Width: 67 3/4
Actual Size: 67 3/4 X 36 1/4
Wood Frame Opening: 68 X 36 1/2
Frame Color: W - White
Glass Type: 1/8" - 5/16"
Glass Makeup: LIT207AA5
Tempered Location: UNIT
Glass Color: CL - CLEAR
Argon Gas: ARGON
Grid Type: NONE - NO Grid
Screen Type: 1816K - 1816 Charcoal
Vent Latch: N
Lock Type: SWEEP - Sweep Latch
Anchor Group: C.HR54.55
Acc Glass Breakage: N
PositiveDesignPressure: 50.0000
PANumber: FL242
~~CondensationResistance: 59.0000~~
SolarHeatGainCoeff: 0.2100
VTCOG: 0.6300

NOA Selection: 20-0406.01
Frame Type: .625FLANGE
Vent Configuration: EQUAL
Size Ref: ACTUAL
Height: 36 1/4
Rough Masonry Opening: 69 1/2 X 37 1/4
Egress Opening: 28 15/16 X 31 5/16 SQFT 6.2846
Glass Family: LI - Laminated Insulating
Interlayer Type: PVB090
Glass: 7/8" LIG (1/8 -TMP - 7/16 ARG-5/16 AN/AN
Does unit need to meet Turtle Code: NO
Low E: ENERGY SHIELD MAX
Privacy Glass: NONE - NONE
Reinf. Upgrade: NONE - None
Screen Frame Type: EXTRUDED
Window Opening Control Device: N
Upgrade Hardware Finish: N
Boxing Options: BS - Box Screen
CAR#: 20-0406.01
NegativeDesignPressure: 50.0000
~~EnergyStar:~~ 123.0000
UF: 0.2900
VT: 0.4700

**PO Number:**

Print Date 6/9/2021

**MIAMI-DADE** COUNTY
**PRODUCT CONTROL SECTION**
11805 SW 26 Street, Room 208
Miami, Florida 33175
T (786) 315-2590 F (786) 315-2599
www.miamidade.gov/economy

**DEPARTMENT OF REGULATORY AND ECONOMIC RESOURCES (RER)**
**BOARD AND CODE ADMINISTRATION DIVISION**

# NOTICE OF ACCEPTANCE (NOA)

**PGT Industries, Inc.**
**1070 Technology Drive**
**North Venice, FL 34275**

## SCOPE:

This NOA is being issued under the applicable rules and regulations governing the use of construction materials. The documentation submitted has been reviewed and accepted by Miami-Dade County RER - Product Control Section to be used in Miami Dade County and other areas where allowed by the Authority Having Jurisdiction (AHJ).

This NOA shall not be valid after the expiration date stated below. The Miami-Dade County Product Control Section (In Miami Dade County) and/or the AHJ (in areas other than Miami Dade County) reserve the right to have this product or material tested for quality assurance purposes. If this product or material fails to perform in the accepted manner, the manufacturer will incur the expense of such testing and the AHJ may immediately revoke, modify, or suspend the use of such product or material within their jurisdiction. RER reserves the right to revoke this acceptance, if it is determined by Miami-Dade County Product Control Section that this product or material fails to meet the requirements of the applicable building code.

This product is approved as described herein, and has been designed to comply with the Florida Building Code, including the High Velocity Hurricane Zone.

**DESCRIPTION: Series "HR-5510" PVC Horizontal Rolling Window – L.M.I.**

**APPROVAL DOCUMENT:** Drawing No. **MD-HR5510-01** titled "Horizontal Roller - LM", sheets 1 through 18 of 18, dated 05/15/15, with revision C dated 04/02/20, prepared by manufacturer, signed and sealed by Anthony Lynn Miller, P.E., bearing the Miami-Dade County Product Control Revision stamp with the Notice of Acceptance number and expiration date by the Miami-Dade County Product Control Section.

**MISSILE IMPACT RATING: Large and Small Missile Impact Resistant**

**LABELING:** Each unit shall bear a permanent label with the manufacturer's name or logo, city, state, model/series, and following statement: "Miami-Dade County Product Control Approved", unless otherwise noted herein.

**RENEWAL** of this NOA shall be considered after a renewal application has been filed and there has been no change in the applicable building code negatively affecting the performance of this product.

**TERMINATION** of this NOA will occur after the expiration date or if there has been a revision or change in the materials, use, and/or manufacture of the product or process. Misuse of this NOA as an endorsement of any product, for sales, advertising or any other purposes shall automatically terminate this NOA. Failure to comply with any section of this NOA shall be cause for termination and removal of NOA.

**ADVERTISEMENT:** The NOA number preceded by the words Miami-Dade County, Florida, and followed by the expiration date may be displayed in advertising literature. If any portion of the NOA is displayed, then it shall be done in its entirety.

**INSPECTION:** A copy of this entire NOA shall be provided to the user by the manufacturer or its distributors and shall be available for inspection at the job site at the request of the Building Official.

This NOA **revises and renews NOA# 17-0411.08** and consists of this page 1 and evidence pages E-1, E-2, E-3 and E-4, as well as approval document mentioned above.

The submitted documentation was reviewed by **Sifang Zhao, P.E.**

MIAMI-DADE COUNTY APPROVED

S.Z.

08/27/2020

**PGT Industries, Inc.**

## NOTICE OF ACCEPTANCE: EVIDENCE SUBMITTED

**1. EVIDENCE SUBMITTED UNDER PREVIOUS NOA's**

**A. DRAWINGS**

**1.** Manufacturer's die drawings and sections. ***(Submitted under NOA No.15-0903.10)***

**2.** Drawing No. **MD-HR5510-01** titled "Horizontal Roller - LM", sheets 1 through 18 of 18, dated 05/15/15, with revision B dated 03/27/17, prepared by manufacturer, signed and sealed by Anthony Lynn Miller, P.E.

**B. TESTS**

**1.** Test reports on: 1) Uniform Static Air Pressure Test, Loading per FBC, TAS 202-94
2) Large Missile Impact Test per FBC, TAS 201-94
3) Cyclic Wind Pressure Loading per FBC, TAS 203-94
along with marked-up drawings and installation diagram of a PVC sliding glass door, a PVC fixed window and an aluminum sliding glass door, using: Kodispace 4SG TPS spacer system, Duraseal® spacer system, Super Spacer® NXT™ spacer system and XL Edge™ spacer system at insulated glass, prepared by Fenestration Testing Laboratory, Inc., Test Reports No. **FTL-8717, FTL-8968** and **FTL-8970**, dated 11/16/15, 06/07/16 and 06/02/16 respectively, all signed and sealed by Idalmis Ortega, P.E. ***(Submitted under previous NOA No. 16-0714.17)***

**2.** Test reports on: 1) Air Infiltration Test, per FBC, TAS 202-94
2) Uniform Static Air Pressure Test, Loading per FBC TAS 202-94
3) Water Resistance Test, per FBC, TAS 202-94
4) Forced Entry Test, per FBC 2411.3.2.1, and TAS 202-94
5) Large Missile Impact Test per FBC, TAS 201-94
6) Cyclic Wind Pressure Loading per FBC, TAS 203-94
along with marked-up drawings and installation diagram of series 5410 and series 5510 PVC horizontal sliding windows, prepared by Fenestration Testing Laboratory, Inc., Test Report No. **FTL-8072**, dated 02/03/15, signed and sealed by Idalmis Ortega, P.E. ***(Submitted under NOA No.15-0903.10)***

**3.** Test reports on: 1) Air Infiltration Test, per FBC, TAS 202-94
2) Uniform Static Air Pressure Test, Loading per FBC TAS 202-94
3) Water Resistance Test, per FBC, TAS 202-94
4) Forced Entry Test, per FBC 2411.3.2.1, and TAS 202-94
5) Large Missile Impact Test per FBC, TAS 201-94
6) Cyclic Wind Pressure Loading per FBC, TAS 203-94
along with marked-up drawings and installation diagram of series 5510 PVC horizontal sliding windows, prepared by Fenestration Testing Laboratory, Inc., Test Report No. **FTL-8073**, dated 02/18/15, signed and sealed by Idalmis Ortega, P.E. ***(Submitted under NOA No.15-0903.10)***

**Sifang Zhao, P.E.**
**Product Control Examiner**
**NOA No. 20-0406.01**
**Expiration Date: September 24, 2025**
**Approval Date: August 27, 2020**

## NOTICE OF ACCEPTANCE: EVIDENCE SUBMITTED

**B. TESTS (CONTINUED)**

**4.** Test reports on: 1) Uniform Static Air Pressure Test, Loading per FBC TAS 202-94
2) Large Missile Impact Test per FBC, TAS 201-94
3) Cyclic Wind Pressure Loading per FBC, TAS 203-94
along with marked-up drawings and installation diagram of series 5510 PVC horizontal sliding windows, prepared by Fenestration Testing Laboratory, Inc., Test Report No. **FTL-8074**, dated 11/06/14, signed and sealed by Idalmis Ortega, P.E. ***(Submitted under NOA No.15-0903.10)***

**C. CALCULATIONS**

**1.** Anchor verification calculations and structural analysis, complying with **FBC-5th Edition (2014)**, dated 08/28/15, prepared by manufacturer, signed and sealed by Anthony Lynn Miller, P.E. ***(Submitted under NOA No.15-0903.10)***

**2.** Glazing complies with **ASTM E1300-09**

**D. QUALITY ASSURANCE**

**1.** Miami-Dade Department of Regulatory and Economic Resources (RER).

**E. MATERIAL CERTIFICATIONS**

**1.** NOA No. **16-1117.01** issued to **Kuraray America, Inc.** for their **"Trosifol® Ultraclear, Clear, and Color PVB Glass Interlayers**", expiring on 07/08/19.

**2.** NOA No. **14-0916.11** issued to **Kuraray America, Inc.** for their **"SentryGlas® (Clear and White) Glass Interlayers**", expiring on 07/04/18.

**3.** NOA No. **16-0712.03** issued to ENERGI Fenestration Solutions USA for their "**White Rigid PVC Exterior Extrusions for Windows and Doors**", expiring on 02/28/18.

**4.** NOA No. **16-0712.04** issued to ENERGI Fenestration Solutions USA, Inc. for their "**Bronze and Lighter Shades of Cap Coated White Rigid PVC Exterior Extrusions for Windows and Doors**", expiring on 04/16/20.

**5.** NOA No. **16-0712.05** issued to ENERGI Fenestration Solutions USA, Inc. for their "**Performance Core Rigid PVC Exterior Extrusions for Windows and Doors**", expiring on 04/16/20.

**F. STATEMENTS**

**1.** Statement letter of conformance, complying with **FBC-5th Edition (2014)** and **FBC-6th Edition (2017)**, dated 08/02/17 and Statement letter of no financial interest, dated 03/31/17issued by manufacturer, signed and sealed by Anthony Lynn Miller, P.E.

**2.** Proposal No. **16-0125** issued by the Product Control Section, dated March 09, 2016, signed by Ishaq Chanda, P.E. ***(Submitted under previous NOA No. 16-0714.17)***

**3.** Proposal issued by Product Control, dated 8/27/14 and revised on 9/10/14, signed by Jaime Gascon, P.E. ***(Submitted under NOA No.15-0903.10)***

**G. OTHERS**

**1.** NOA No. **16-0714.17**, issued to PGT Industries, Inc. for their Series "HR-5510" PVC Horizontal Rolling Window - L.M.I., expiring on 09/24/20.

**Sifang Zhao, P.E.**
**Product Control Examiner**
**NOA No. 20-0406.01**
**Expiration Date: September 24, 2025**
**Approval Date: August 27, 2020**

## NOTICE OF ACCEPTANCE: EVIDENCE SUBMITTED

**2. NEW EVIDENCE SUBMITTED UNDER PREVIOUS NOA's**

**A. DRAWINGS**

**1.** Drawing No. **MD-HR5510-01** titled "Horizontal Roller - LM", sheets 1 through 18 of 18, dated 05/15/15, with revision C dated 04/02/2020, prepared by manufacturer, signed and sealed by Anthony Lynn Miller, P.E.

**B. TESTS**

**1.** Test reports on: 1) Air Infiltration Test, per FBC, TAS 202-94
2) Uniform Static Air Pressure Test, Loading per FBC, TAS 202-94
3) Water Resistance Test, per FBC, TAS 202-94
4) Large Missile Impact Test per FBC, TAS 201-94
5) Cyclic Wind Pressure Loading per FBC, TAS 203-94
6) Forced Entry Test, per ASTM F588 and TAS 202-94

along with marked-up drawings and installation diagram of all PGT Industries, Inc. representative units listed below and tested to qualify **Dowsil 791** and **Dowsil 983** silicones, prepared by Fenestration Testing Laboratory, Inc., Test Reports No.:
**FTL-7897,** PGT PW5520 PVC Fixed Window (unit 6 in proposal), dated 09/03/14
**FTL-20-2107.1,** PGT SGD780 Aluminum Sliding Glass Door (unit 7 in proposal)
**FTL-20-2107.2,** PGT CA740 Alum. Outswing Casement Window (unit 8 in proposal)
**FTL-20-2107.3,** PGT PW7620A Aluminum Fixed Window (unit 9 in proposal) and
**FTL-20-2107.4**, PGT PW7620A Aluminum Fixed Window (unit 10 in proposal)
dated 07/13/20, all signed and sealed by Idalmis Ortega, P.E

**C. CALCULATIONS**

**1.** Anchor verification calculations and structural analysis, complying with **FBC-6th Edition *(*2017)** and **FBC-7th (2020)** dated 04/02/2020, prepared by manufacturer, signed and sealed by Anthony Lynn Miller, P.E.

**D. QUALITY ASSURANCE**

**1.** Miami-Dade Department of Regulatory and Economic Resources (RER).

**E. MATERIAL CERTIFICATIONS**

**1.** NOA No. **19-0305.02** issued to **Kuraray America, Inc.** for their "**Trosifol® Ultraclear, Clear and Color PVB Glass Interlayers**", expiring on 07/08/24.

**2.** NOA No. **17-0808.02** issued to **Kuraray America, Inc.** for their **"SentryGlas® (Clear and White) Glass Interlayers**", expiring on 07/04/23.

**3.** NOA No. **18-0122.02** issued to ENERGI Fenestration Solutions USA, for their "**White Rigid PVC Exterior Extrusions for Windows and Doors**" dated 03/08/18, expiring on 02/28/23.

**4.** NOA No. **20-0203.03** issued to ENERGI Fenestration Solutions USA, Inc. for their "**Bronze and Lighter Shades of Cap Coated Rigid PVC Exterior Extrusions for Windows and Doors**" dated 02/27/20, expiring on 04/16/25.

**Sifang Zhao, P.E.**
**Product Control Examiner**
**NOA No. 20-0406.01**
**Expiration Date: September 24, 2025**
**Approval Date: August 27, 2020**

## NOTICE OF ACCEPTANCE: EVIDENCE SUBMITTED

**E. MATERIAL CERTIFICATIONS**(CONTINUED)

**5.** NOA No. **20-0203.04** issued to ENERGI Fenestration Solutions USA, Inc. for their "**Performance Core Rigid PVC Exterior Extrusions for Windows and Doors**" dated 02/27/20, expiring on 04/16/25.

**F. STATEMENTS**

1. Statement letter of conformance, complying with **FBC-6th Edition (2017) and FBC-7th Edition (2020)**, dated 03/27/20, issued by manufacturer, signed and sealed by Anthony Lynn Miller, P.E.

**2.** Statement letter of no financial interest, dated 03/27/20, issued by manufacturer, signed and sealed by Anthony Lynn Miller, P.E.

**G. OTHERS**

**1.** NOA No. **17-0411.08**, issued to PGT Industries, Inc. for their Series "HR-5510" PVC Horizontal Rolling Window - L.M.I., expiring on 09/24/20.

**Sifang Zhao, P.E.**
**Product Control Examiner**
**NOA No. 20-0406.01**
**Expiration Date: September 24, 2025**
**Approval Date: August 27, 2020**

| DESIGN PRESSURE RATING | IMPACT RATING |
|---|---|
| VARIES PER REINFORCEMENT LEVEL, SEE SHEETS 6-8 | LARGE & SMALL MISSILE IMPACT RESISTANT |

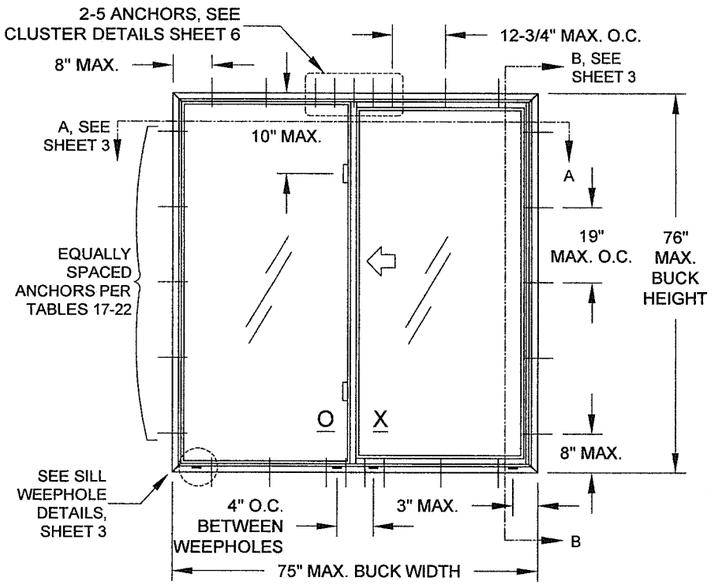


ELEVATION FOR TYP. EQUAL LEG FRAME
SHOWN AS OX CONFIGURATION

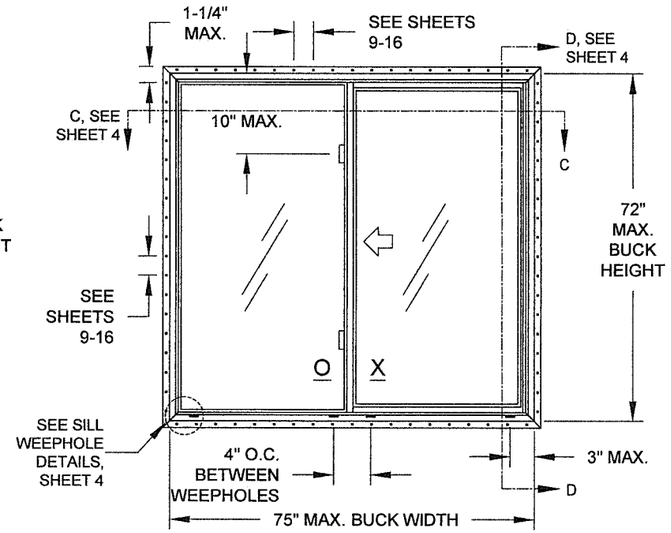


ELEVATION FOR TYP. FIN OR J-CHANNEL
FRAME SHOWN AS OX CONFIGURATION
ANCHORED THROUGH THE NAIL-FIN

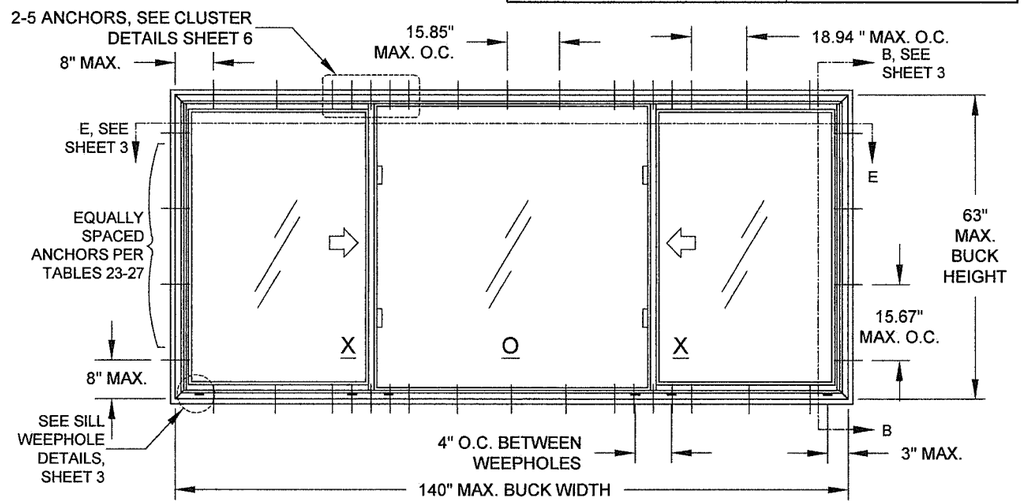


ELEVATION FOR TYP. FLANGE FRAME
SHOWN AS XOX CONFIGURATION

CODES / STANDARDS USED:

- 2020 FLORIDA BUILDING CODE (FBC), 7TH EDITION
- 2017 FLORIDA BUILDING CODE (FBC), 6TH EDITION
- ASTM E1300-09
- ANSI/AF&PA NDS-2018 FOR WOOD CONSTRUCTION
- ALUMINUM DESIGN MANUAL, ADM-2015
- AISI S100-16
- AISC 360-16

## GENERAL NOTES: SERIES 5510 IMPACT RESISTANT HORIZONTAL ROLLER

1) THIS PRODUCT HAS BEEN DESIGNED & TESTED TO COMPLY WITH THE REQUIREMENTS OF THE FLORIDA BUILDING CODE, INCLUDING THE HIGH VELOCITY HURRICANE ZONE (HVHZ).
2) SHUTTERS ARE NOT REQUIRED WHEN USED IN WIND-BORNE DEBRIS REGIONS. FOR INSULATED GLASS INSTALLATIONS ABOVE 30' IN THE HVHZ, THE OUTBOARD LITE (CAP) MUST TEMPERED.
3) FOR MASONRY APPLICATIONS IN MIAMI-DADE COUNTY, USE ONLY MIAMI-DADE COUNTY APPROVED MASONRY ANCHORS. MATERIALS USED FOR ANCHOR EVALUATIONS WERE SOUTHERN PINE, ASTM C90 CONCRETE MASONRY UNITS AND CONCRETE WITH MIN. KSI PER ANCHOR TYPE.
4) ALL WOOD BUCKS LESS THAN 1-1/2" THICK ARE TO BE CONSIDERED 1X INSTALLATIONS. 1X WOOD BUCKS ARE OPTIONAL IF UNIT IS INSTALLED DIRECTLY TO SUBSTRATE. WOOD BUCKS DEPICTED AS 2X ARE 1-1/2" THICK OR GREATER. 1X AND 2X BUCKS (WHEN USED) SHALL BE DESIGNED AND SECURED TO PROPERLY TRANSFER LOADS TO THE STRUCTURE. WOOD BUCK DESIGN AND INSTALLATION IS THE RESPONSIBILITY OF THE ENGINEER, (EOR) OR ARCHITECT OF RECORD, (AOR).
5) ANCHOR EMBEDMENT TO BASE MATERIAL SHALL BE BEYOND WALL DRESSING OR STUCCO. USE ANCHORS OF SUFFICIENT LENGTH TO ACHIEVE REQUIRED MIN. EMBEDMENT. INSTALLATION ANCHORS SHOULD BE SEALED. OVERALL SEALING/FLASHING STRATEGY FOR WATER RESISTANCE OF INSTALLATION SHALL BE DONE BY OTHERS AND IS BEYOND THE SCOPE OF THESE INSTRUCTIONS.
6) 1/4" MAX. SHIMS ARE REQUIRED AT EACH ANCHOR LOCATION WHERE THE PRODUCT IS NOT FLUSH TO THE SUBSTRATE. USE SHIMS CAPABLE OF TRANSFERRING APPLIED LOADS.
7) DESIGN PRESSURES:
   A. NEGATIVE DESIGN LOADS BASED ON STRUCTURAL & CYCLE TESTING AND GLASS PER ASTM E1300.
   B. POSITIVE DESIGN LOADS BASED ON WATER TEST PRESSURE, STRUCTURAL & CYCLE TESTING AND GLASS PER ASTM E1300.
   C. DESIGN LOADS ARE BASED ON ALLOWABLE STRESS DESIGN, ASD.
8) THE ANCHORAGE METHODS SHOWN HAVE BEEN DESIGNED TO RESIST THE WINDLOADS CORRESPONDING TO THE REQUIRED DESIGN PRESSURE. THE 33-1/3% STRESS INCREASE HAS NOT BEEN USED IN THE DESIGN OF THIS PRODUCT. THE 1.6 LOAD DURATION FACTOR WAS USED FOR THE EVALUATION OF ANCHORS INTO WOOD. ANCHORS THAT COME INTO CONTACT WITH OTHER DISSIMILAR MATERIALS SHALL MEET THE REQUIREMENTS OF THE FLORIDA BUILDING CODE FOR CORROSION RESISTANCE.
9) METAL SUBSTRATE TO MEET MIN. STRENGTH AND THICKNESS REQUIREMENTS PER CURRENT FLORIDA BUILDING CODE AND TO BE REVIEWED BY THE AUTHORITY HAVING JURISDICTION.
10) REFERENCES: TEST REPORTS FTL-8072, 8073 & 8074; ELCO ULTRACON NOA; DEWALT ULTRACON+ NOA; ELCO/DEWALT CRETEFLEX NOA; ELCO/DEWALT AGGRE-GATOR NOA; ENERGI WINDOW AND DOOR PROFILES, LTD WHITE & BRONZE/LIGHTER SHADES OF CAP COATED PVC EXTRUSION NOA'S; NATIONAL DESIGN SPECIFICATION FOR WOOD CONSTRUCTION, ANSI/AF&PA NDS & ALUMINUM DESIGN MANUAL
11) APPLICABLE EGRESS REQUIREMENTS TO BE REVIEWED BY BUILDING OFFICIAL.

## USER INSTRUCTIONS:

1) DETERMINE THE SITE SPECIFIC, WINDOW OPENING'S DESIGN PRESSURE REQUIREMENT USING WINDLOAD STANDARD ASCE 7.
2) KNOWING YOUR FRAME TYPE, WINDOW CONFIGURATION (OX, XO, XOX), SIZE, GLAZING OPTION FROM (TABLE 1) AND REINFORCEMENT LEVEL, DETERMINE YOUR WINDOW'S DESIGN PRESSURE REQUIREMENT FOR THE WINDOW OPENING USING TABLES 6-16 (SHEETS 6-8). IT MUST EQUAL OR EXCEED THE DESIGN PRESSURE REQUIREMENT FOR THE WINDOW OPENING OBTAINED IN STEP 1. USE INDEX TABLE 5 ON SHEET 6 TO HELP FIND THE APPROPRIATE TABLE.
3) DETERMINE THE MOST SUITABLE ANCHOR GROUP FROM TABLES 2 AND 3 ON SHEET 2 ACCORDING TO THE INSTALLATION CONDITIONS.
4) DETERMINE THE ANCHOR QUANTITY FROM TABLES 17-27 (SHEETS 9-16), VERIFY THE ANCHOR/SUBSTRATE WILL MEET REQUIREMENTS FOR YOUR OPENING'S CONDITION FROM TABLES 2 OR 3, AND THAT ALL MIN. REQUIREMENTS FROM THIS SHEET SET ARE MET.
5)INSTALL AS PER SHEET 3 FOR FLANGE/EQUAL LEG INSTALLATION OR SHEET 4 FOR INTEGRAL FIN/J-CHANNEL INSTALLATION. USE TABLE 4 ON SHEET 2 TO FIND THE APPROPRIATE DETAILS.

NOTE: DESIGN PRESSURE RATING DETERMINATION IS THE SAME PROCESS FOR ALL FRAME TYPES (J-CHANNEL, FLANGE, INTEGRAL FIN OR EQUAL LEG/BOX), SEE FIGURE B ON SHEET 2.


GENERAL NOTES.....1
ELEVATIONS.....1
FRAME, GLASS & ANCHOR OPTIONS.....2
INSTALLATION, FLANGE & EQUAL LEG/BOX.....3
INSTALLATION, INTEGRAL FIN & J-CHANNEL.....4
GLAZING DETAILS.....5
DESIGN PRESSURES.....6-8
ANCHOR QUANTITIES.....9-16
EXTRUSION PROFILES & BOM....17
ASSEMBLY.....18


ANTHONY LYNN MILLER
LICENSE
No. 58705
STATE OF FLORIDA
PROFESSIONAL ENGINEER
4/2/20
A. LYNN MILLER, P.E.
P.E.# 58705


1070 TECHNOLOGY DRIVE
N. VENICE, FL 34275
(941)-480-1600
REGISTRATION #29296


**Revision:**
C) UPDATED TO FBC 2020, REVISED ANCHOR TYPE TABLE.
AK - 03/27/20

**PRODUCT REVISED**
**as complying with the Florida Building Code**
**NOA-No.** 20-0406.01
**Expiration Date** 09/24/2025
**By**
**Miami-Dade Product Control**

| Description: | Drawn By: |
|---|---|
| GENERAL NOTES & ELEVATION | J ROSOWSKI |

| Title: | Date: |
|---|---|
| HORIZONTAL ROLLER - LM | 05/15/15 |

| Series/Model: | Scale: | Sheet: | Drawing No. | Rev: |
|---|---|---|---|---|
| HR-5510 | NTS | 1 OF 18 | MD-HR5510-01 | C |

TABLE 1: ALLOWABLE GLASS TYPES

| Glass Type | Description (Listed from Exterior to Interior) |
|---|---|
| 5 | 7/8" Laminated I.G.: 1/8" A Exterior Cap + 7/16" Air Space + 5/16" Laminated; (2) Lites of 1/8" A Glass with .090" PVB Interlayer |
| 6 | 7/8" Laminated I.G.: 1/8" T Exterior Cap + 7/16" Air Space + 5/16" Laminated; (2) Lites of 1/8" A Glass with .090" PVB Interlayer |
| 7 | 7/8" Laminated I.G.: 3/16" A Exterior Cap + 3/8" Air Space + 5/16" Laminated; (2) Lites of 1/8" A Glass with .090" PVB Interlayer |
| 8 | 7/8" Laminated I.G.: 3/16" T Exterior Cap + 3/8" Air Space + 5/16" Laminated; (2) Lites of 1/8" A Glass with .090" PVB Interlayer |
| 10 | 7/8" Laminated I.G.: 1/8" T Exterior Cap + 7/16" Air Space + 5/16" Laminated; (2) Lites of 1/8" H Glass with .090" SG Interlayer |
| 11 | 7/8" Laminated I.G.: 3/16" A Exterior Cap + 3/8" Air Space + 5/16" Laminated; (2) Lites of 1/8" H Glass with .090" SG Interlayer |
| 12 | 7/8" Laminated I.G.: 3/16" T Exterior Cap + 3/8" Air Space + 5/16" Laminated; (2) Lites of 1/8" H Glass with .090" SG Interlayer |
| 14 | 7/8" Laminated I.G.: 1/8" T Exterior Cap + 5/16" Air Space + 7/16" Laminated; (2) Lites of 3/16" A Glass with .090" SG Interlayer |
| 15 | 7/8" Laminated I.G.: 3/16" A Exterior Cap + 1/4" Air Space + 7/16" Laminated; (2) Lites of 3/16" A Glass with .090" SG Interlayer |
| 16 | 7/8" Laminated I.G.: 3/16" T Exterior Cap + 1/4" Air Space + 7/16" Laminated; (2) Lites of 3/16" A Glass with .090" SG Interlayer |

SEE SHEET 6, TABLE 5 FOR GLAZING/DESIGN PRESSURE/ANCHORAGE INDEX.

"A" = ANNEALED
"H" = HEAT STRENGTHENED
"T" = TEMPERED
"PVB" = .090" TROSIFOL® PVB BY KURARAY AMERICA, INC.

"SG" = .090" SENTRYGLAS® INTERLAYER BY KURARAY AMERICA, INC.

GLASS TYPES 5, 7, 11 & 15 MAY NOT BE USED IN THE HVHZ ABOVE 30'.

TABLE 4: INDEX OF INSTALLATION METHODS PER FRAME TYPE

| Frame Types (see Fig B) | Glass Options (see Table 1) | Installation Conditions | Substrate Option Detail Sheet |
|---|---|---|---|
| J-Channel (#1) | 5-8 | Through the integral fin..... | ....into 2X Wood Frame/Buckstrip - sheet 4, option 5 |
| | | | ....into Metal - sheet 4, option 8 |
| | | Through the frame of the window..... | ....into 2X Wood Frame/Buckstrip - sheet 4, option 6 |
| | | | ....into Metal - sheet 4, option 7 |
| Flange (#2) | All | Through the frame of the window..... | ....into 2X Wood Frame/Buckstrip - sheet 3, option 1 |
| | | | ....into Concrete/CMU - sheet 3, option 2 |
| | | | ....through 1X Buckstrip into Concrete/CMU - sheet 3, option 3 |
| | | | ....into Metal - sheet 3, option 4 |
| Integral Fin (#3) | 5-8 | Through the integral fin..... | ....into 2X Wood Frame/Buckstrip - sheet 4, option 5 |
| | | | ....into Metal - sheet 4, option 8 |
| | | Through the frame of the window..... | ....into 2X Wood Frame/Buckstrip - sheet 4, option 6 |
| | | | ....into Metal - sheet 4, option 7 |
| Box / Equal-Leg (#4) | All | Through the frame of the window..... | ....into 2X Wood Frame/Buckstrip - sheet 3, option 1 |
| | | | ....into Concrete/CMU - sheet 3, option 2 |
| | | | ....through 1X Buckstrip into Concrete/CMU - sheet 3, option 3 |
| | | | ....into Metal - sheet 3, option 4 |

TABLE 2: ALLOWABLE ANCHORS THROUGH THE FRAME

| Group | Anchor | Substrate | Min. Edge Distance | Min. Embedment* |
|---|---|---|---|---|
| A | #10 SMS (steel, 18-8 S.S. or 410 S.S.) | P.T. Southern Pine (SG=0.55) | 7/16" | 1-3/8" |
| | | Steel, A36* | 3/8" | 0.050" |
| | | Steel Stud, A653 Gr. 33* | 3/8" | 0.0451" (18 Ga.) |
| | | Aluminum, 6063-T5* | 3/8" | 0.050" |
| | 3/16" steel Ultracon or Ultracon+ | P.T. Southern Pine (SG=0.55) | 7/16" | 1-3/8" |
| | | Concrete (min. 3 ksi) | 1" | 1-3/8" |
| | 3/16" steel Ultracon | Ungrouted CMU, (ASTM C-90) | 2-1/2" | 1-1/4" |
| | 3/16" steel Ultracon+ | Ungrouted CMU, (ASTM C-90) | 1" | 1-1/4" |
| B | #12 SMS (steel, 18-8 S.S. or 410 S.S.) | P.T. Southern Pine (SG=0.55) | 9/16" | 1-3/8" |
| | | Steel, A36* | 3/8" | 0.050" |
| | | Steel Stud, A653 Gr. 33* | 3/8" | 0.0451" (18 Ga.) |
| | | Aluminum, 6063-T5* | 3/8" | 0.063" |
| | 1/4" steel Ultracon or Ultracon+ | P.T. Southern Pine (SG=0.55) | 1" | 1-3/8" |
| | 1/4" steel Creteflex | P.T. Southern Pine (SG=0.55) | 1" | 1-3/8" |
| | 1/4" steel Aggre-Gator | P.T. Southern Pine (SG=0.55) | 1" | 1-3/8" |
| C | 1/4" steel Ultracon | Concrete (min. 2.85 ksi) | 1" | 1-3/4" |
| | | Ungrouted CMU, (ASTM C-90) | 2-1/2" | 1-1/4" |
| | 1/4" steel Ultracon+ | Concrete (min. 3 ksi) | 1-3/16" | 1-3/4" |
| | | Ungrouted CMU, (ASTM C-90) | 1" | 1-1/4" |
| | 1/4" steel Creteflex | Concrete (min. 3.35 ksi) | 1" | 1-3/4" |
| D | 1/4" steel Ultracon | Concrete (min. 2.85 ksi) | 2-1/2" | 1-3/4" |
| | 1/4" steel Ultracon+ | Concrete (min. 3 ksi) | 2-1/2" | 1-3/4" |
| | 1/4" steel Ultracon+ | Ungrouted CMU, (ASTM C-90) | 2-1/2" | 1-1/4" |
| | 1/4" steel Creteflex | Concrete (min. 3.35 ksi) | 2-1/2" | 1-3/4" |
| | | Ungrouted CMU, (ASTM C-90) | 2-1/2" | 1-1/4" |
| | 1/4" steel Aggre-Gator | Concrete (min. 3.275 ksi) | 1-1/2" | 1-3/8" |
| | | Grouted CMU, (ASTM C-90) | 2" | 2" |

* MIN. OF 3 THREADS BEYOND THE METAL SUBSTRATE.

"UNGROUTED CMU" VALUES MAY BE USED FOR GROUTED CMU APPLICATIONS.

| Material | Min. $F_y$ | Min. $F_u$ |
|---|---|---|
| Steel Screw | 92 ksi | 120 ksi |
| 18-8 Screw | 60 ksi | 95 ksi |
| 410 Screw | 90 ksi | 110 ksi |
| Elco/DeWalt Aggre-Gator® | 57 ksi | 96 ksi |
| Elco UltraCon® | 155 ksi | 177 ksi |
| 3/16" DeWalt UltraCon+® | 117 ksi | 164 ksi |
| 1/4" DeWalt UltraCon+® | 148 ksi | 164 ksi |
| 410 SS Elco/Dewalt CreteFlex® | 127.4 ksi | 189.7 ksi |
| 6063-T5 Aluminum | 16 ksi | 22 ksi |
| A36 Steel | 36 ksi | 58 ksi |
| Gr. 33 Steel Stud | 33 ksi | 45 ksi |

INSTALLATION NOTES, SEE SHEETS 3 & 4 FOR ILLUSTRATIONS:

1) USE ONLY SUBSTRATE-APPROPRIATE ANCHORS LISTED ON TABLES 2 & 3, THIS SHEET. FOLLOW EMBEDMENT AND EDGE DISTANCE LIMITS. ANY INSTALLATION OPTION SHOWN MAY BE USED ON ANY SIDE OF THE WINDOW.

2) MASONRY ANCHORS MAY BE USED INTO WOOD AS PER TABLE 2, THIS SHEET. ALL WOOD BUCKS LESS THAN 1-1/2" THICK ARE TO BE CONSIDERED 1X INSTALLATIONS. 1X WOOD BUCKS ARE OPTIONAL IF UNIT IS INSTALLED DIRECTLY TO SUBSTRATE. WOOD BUCKS DEPICTED AS 2X ARE 1-1/2" THICK OR GREATER. 1X AND 2X BUCKS (WHEN USED) SHALL BE DESIGNED TO PROPERLY TRANSFER LOADS TO THE STRUCTURE. WOOD BUCK DESIGN AND INSTALLATION IS THE RESPONSIBILITY OF THE ENGINEER OR ARCHITECT OF RECORD.

3) VISIBLE LIGHT WIDTH OR HEIGHT (ALSO REFERRED TO AS DAYLIGHT OPENING) IS MEASURED FROM BEADING TO BEADING.

4) SEE SHEET 18 FOR OPTIONAL EGRESS LOCK DETAILS.

FIGURE B: FRAME TYPES

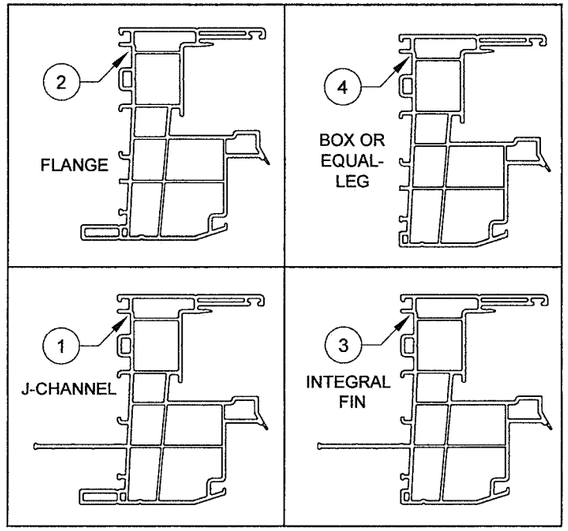


TABLE 3: ALLOWABLE ANCHORS THROUGH THE INTEGRAL FIN

| Group | Anchor | Substrate | Min. Edge Distance | Min. Embedment* |
|---|---|---|---|---|
| E | 2-1/2" x .131" Common Nail | P.T. Southern Pine (SG=0.55) | 3/8" | 2-7/16" |
| F | 2-1/2" Ring-shank Roofing Nail | P.T. Southern Pine (SG=0.55) | 3/8" | 2-7/16" |
| | #10 Trusshead SMS (steel, 18-8 S.S. or 410 S.S.) | P.T. Southern Pine (SG=0.55) | 1/2" | 1-3/8" |
| | | Aluminum, 6063-T5* | 3/8" | 0.050" |
| | | Steel Stud, Gr. 33* | 3/8" | 0.0451" (18 Ga.) |
| | | Steel, A36* | 3/8" | 0.050" |
| | #12 SMS (steel, 18-8 S.S. or 410 S.S.) | P.T. Southern Pine (SG=0.55) | 9/16" | 1-3/8" |
| | | Aluminum, 6063-T5* | 3/8" | 0.063" |
| | | Steel Stud, Gr. 33* | 3/8" | 0.050" |
| | | Steel, A36* | 3/8" | 0.050" |

* MIN. OF 3 THREADS BEYOND THE METAL SUBSTRATE.

ANTHONY LYNN MILLER LICENSE No. 58705 STATE OF FLORIDA PROFESSIONAL ENGINEER
A. LYNN MILLER, P.E.
P.E.# 58705

PGT®
1070 TECHNOLOGY DRIVE
N. VENICE, FL 34275
(941)-480-1600
REGISTRATION #29296

**PRODUCT REVISED**
as complying with the Florida Building Code
NOA-No. 20-0406.01
Expiration Date 09/24/2025
By
Miami-Dade Product Control

Revision:
C) REVISED ANCHOR TABLE, CORRECTED TABLE 4.
AK - 03/27/20

Description: GLASS/ANCHORS/FRAME OPTIONS
Drawn By: J ROSOWSKI
Title: HORIZONTAL ROLLER - LM
Date: 05/15/15
Series/Model: HR-5510
Scale: NTS
Sheet: 2 OF 18
Drawing No.: MD-HR5510-01
Rev: C

# INSTALLATION DETAILS FOR FLANGE AND EQUAL-LEG FRAMES

## INSTALLATION OPTION 1

ANCHORED THROUGH FRAME INTO 2X WOOD FRAME OR BUCKSTRIP. SEE NOTE 2, SHEET 2.

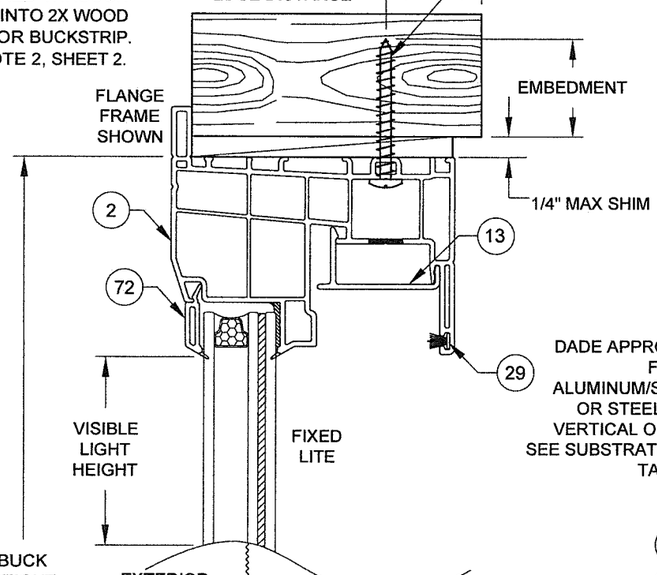


## VERTICAL SECTION B-B

## INSTALLATION OPTION 2

ANCHORED THROUGH FRAME DIRECTLY INTO CONCRETE/CMU.

## INSTALLATION OPTION 4

ANCHORED THROUGH FRAME INTO METAL

SEE INSTALLATION NOTES SHEET 2

## INSTALLATION OPTION 3

ANCHORED THROUGH FRAME AND 1X BUCKSTRIP INTO CONCRETE/CMU. SEE NOTE 2, SHEET 2.

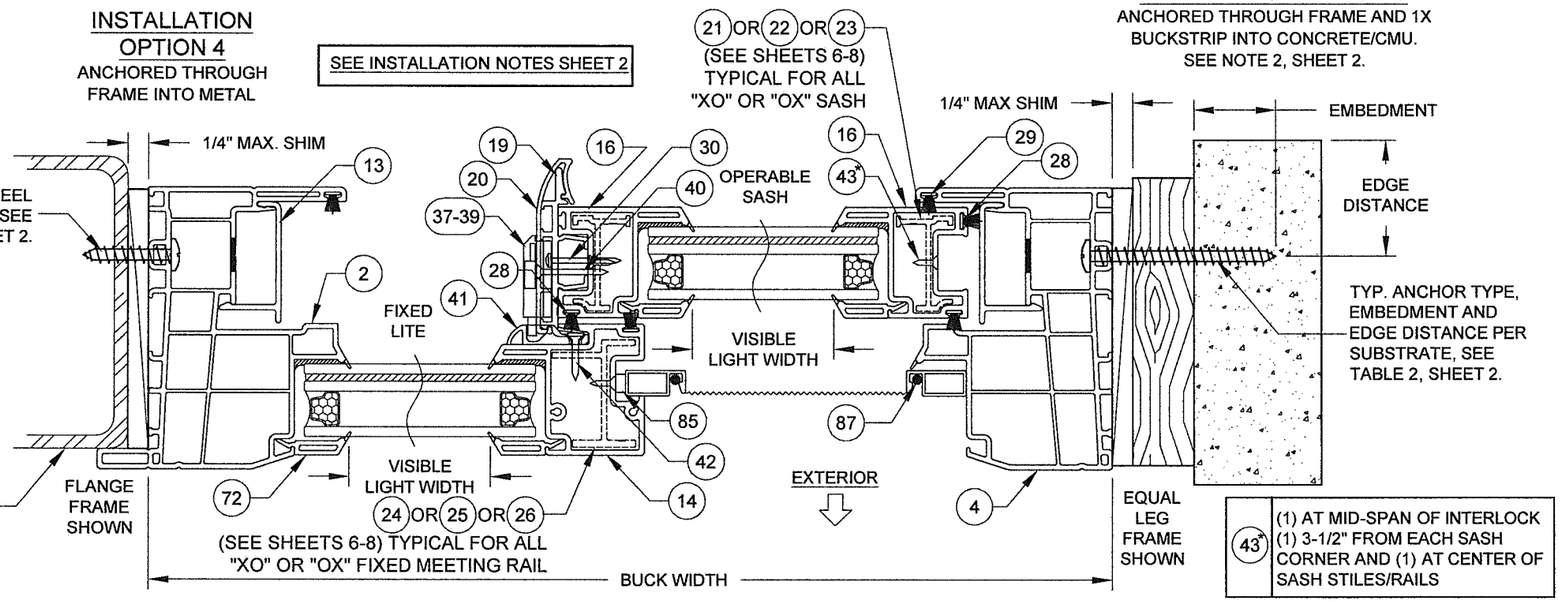


| | |
|---|---|
| 43* | (1) AT MID-SPAN OF INTERLOCK (1) 3-1/2" FROM EACH SASH CORNER AND (1) AT CENTER OF SASH STILES/RAILS |

## HORIZONTAL SECTION A-A (OX)

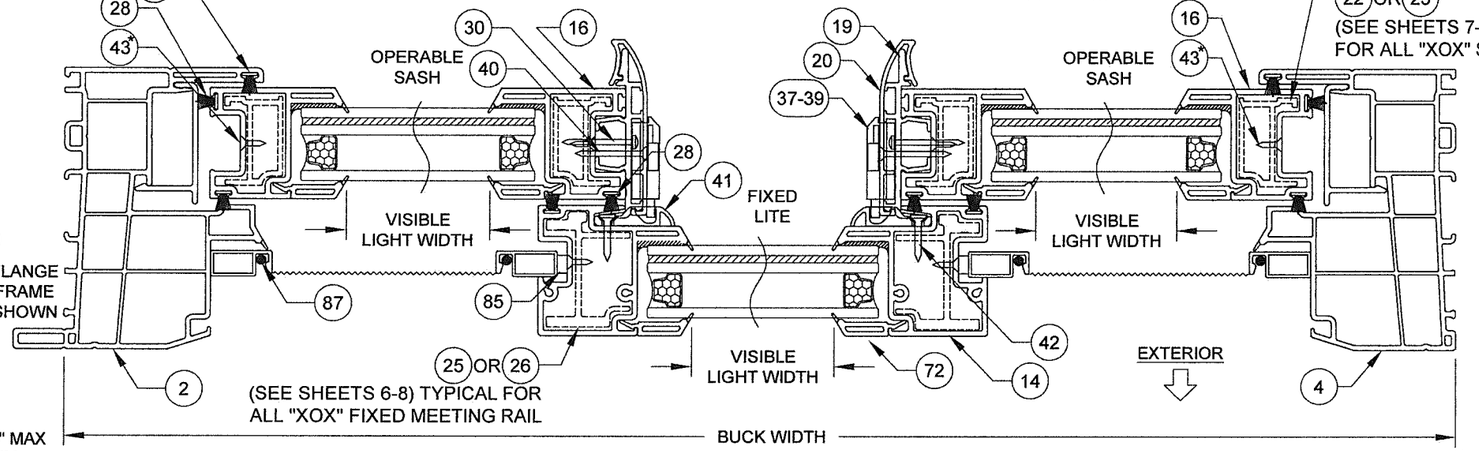


## HORIZONTAL SECTION E-E (XOX)

INSTALLATION AS PER SECTION A-A ABOVE

## VISIBLE LIGHT FORMULAS (EQUAL-LITE, XO & OX)

WIDTH: BUCK WIDTH / 2 - 4-1/4"
HEIGHT: BUCK HEIGHT - 7-1/4"

ANTHONY LYNN MILLER LICENSE No. 58705 STATE OF FLORIDA PROFESSIONAL ENGINEER
12/2/20
A. LYNN MILLER, P.E.
P.E.# 58705

PGT®
1070 TECHNOLOGY DRIVE
N. VENICE, FL 34275
(941)-480-1600
REGISTRATION #29296

**PRODUCT REVISED**
**as complying with the Florida Building Code**
**NOA-No.** 20-0406.01
**Expiration Date** 09/24/2025
**By**
**Miami-Dade Product Control**

*Revision:*
C) NO CHANGES THIS SHEET.
AK - 03/27/20

| | | | |
|---|---|---|---|
| *Description:* FLANGE & EQUAL-LEG/BOX FRAMES | | | *Drawn By:* J ROSOWSKI |
| *Title:* HORIZONTAL ROLLER - LM | | | *Date:* 05/15/15 |
| *Series/Model:* HR-5510 | *Scale:* NTS | *Sheet:* 3 OF 18 | *Drawing No.* MD-HR5510-01 | *Rev:* C |

# INSTALLATION DETAILS FOR FIN AND J-CHANNEL FRAMES

## INSTALLATION OPTION 5

ANCHORED THROUGH INTEGRAL FIN INTO 2X WOOD FRAME OR BUCK-STRIP. SEE NOTE 2, SHEET 2.

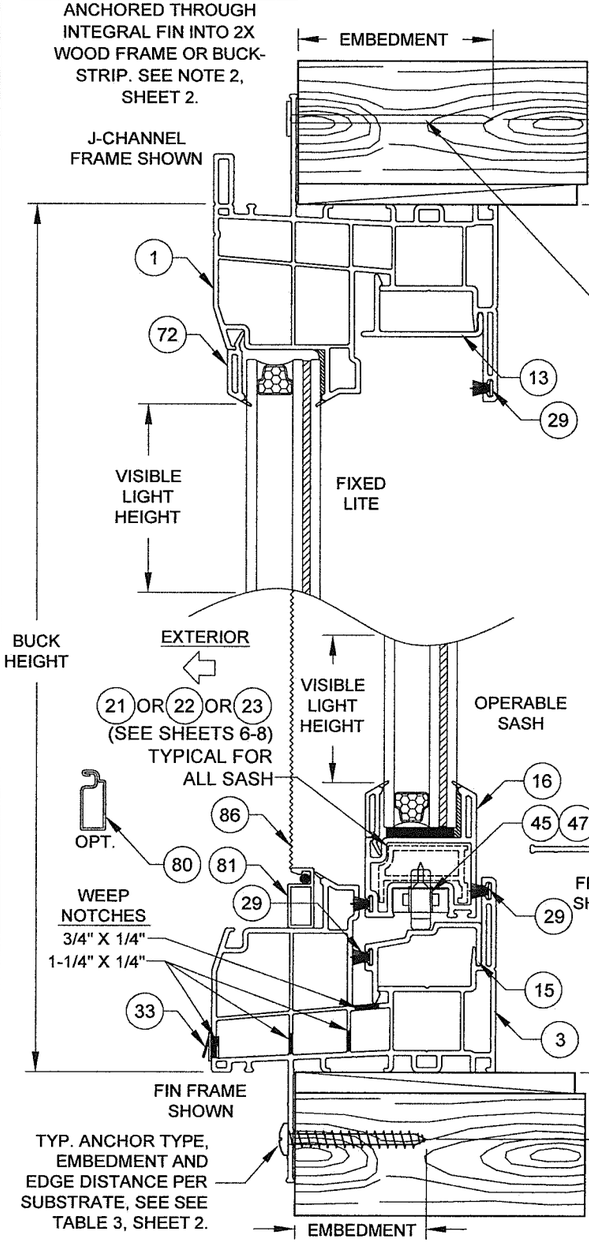


## INSTALLATION OPTION 7

ANCHORED THROUGH FRAME INTO METAL (INTEGRAL FIN/FLANGE REMOVED)

SEE INSTALLATION NOTES SHEET 2

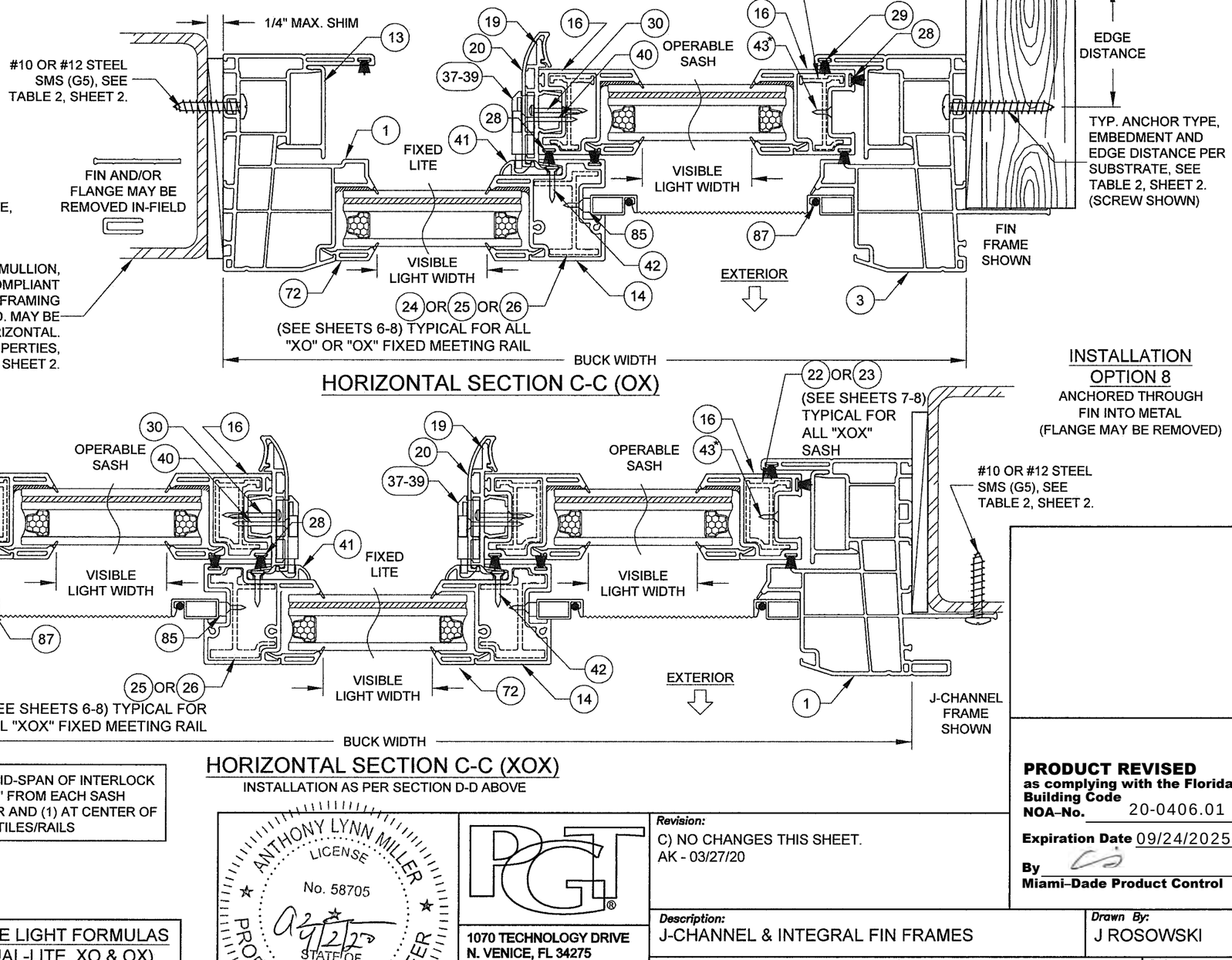


## INSTALLATION OPTION 6

ANCHORED THROUGH FRAME INTO 2X WOOD FRAME OR BUCKSTRIP. SEE NOTE 2, SHEET 2.

## HORIZONTAL SECTION C-C (OX)




## INSTALLATION OPTION 8

ANCHORED THROUGH FIN INTO METAL (FLANGE MAY BE REMOVED)




## HORIZONTAL SECTION C-C (XOX)

INSTALLATION AS PER SECTION D-D ABOVE

| | |
|---|---|
| 43* | (1) AT MID-SPAN OF INTERLOCK (1) 3-1/2" FROM EACH SASH CORNER AND (1) AT CENTER OF SASH STILES/RAILS |

## VERTICAL SECTION D-D

### INSTALLATION OPTION 5

ANCHORED THROUGH INTEGRAL FIN INTO 2X WOOD FRAME OR BUCK-STRIP. SEE NOTE 2, SHEET 2.

### VISIBLE LIGHT FORMULAS (EQUAL-LITE, XO & OX)

WIDTH: BUCK WIDTH / 2 - 4-1/4"
HEIGHT: BUCK HEIGHT - 7-1/4"

ANTHONY LYNN MILLER LICENSE No. 58705 STATE OF FLORIDA PROFESSIONAL ENGINEER
A. LYNN MILLER, P.E.
P.E.# 58705


1070 TECHNOLOGY DRIVE
N. VENICE, FL 34275
(941)-480-1600
REGISTRATION #29296


**PRODUCT REVISED**
as complying with the Florida Building Code
NOA–No. 20-0406.01
Expiration Date 09/24/2025
By
Miami–Dade Product Control

Revision:
C) NO CHANGES THIS SHEET.
AK - 03/27/20

| | | | | |
|---|---|---|---|---|
| Description: J-CHANNEL & INTEGRAL FIN FRAMES | | | | Drawn By: J ROSOWSKI |
| Title: HORIZONTAL ROLLER - LM | | | | Date: 05/15/15 |
| Series/Model: HR-5510 | Scale: NTS | Sheet: 4 OF 18 | Drawing No. MD-HR5510-01 | Rev: C |

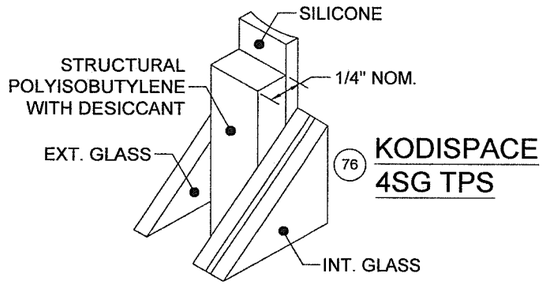


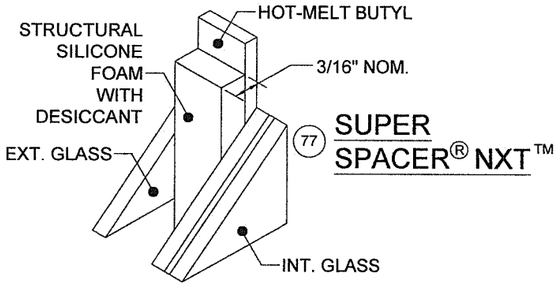


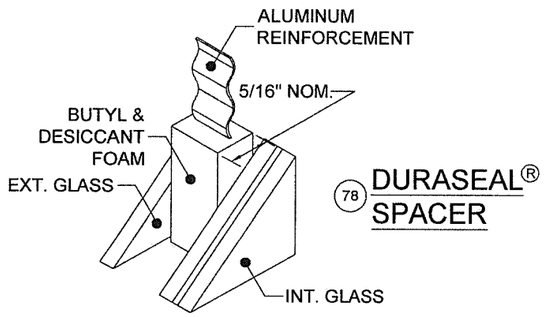


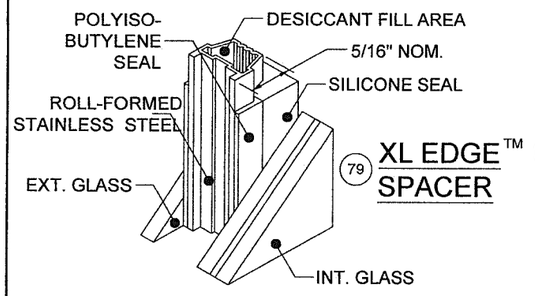


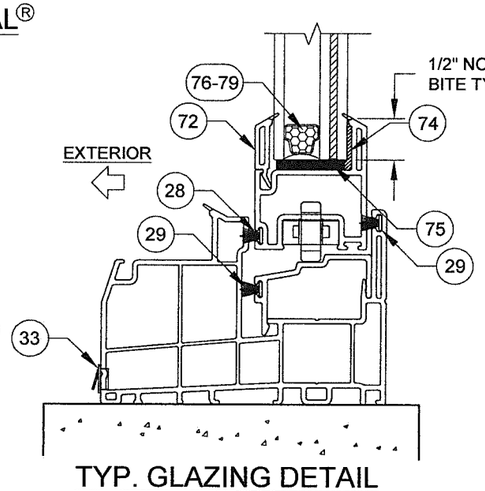


TYP. GLAZING DETAIL

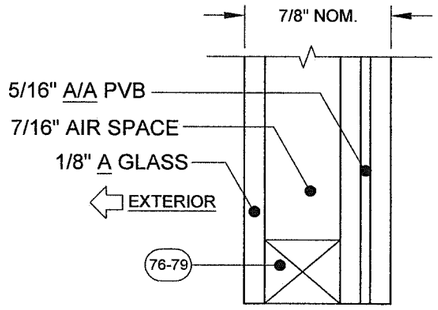


GLASS TYPE 5

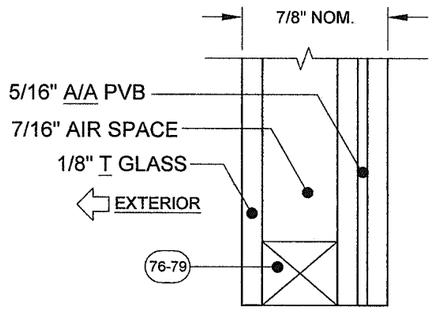


GLASS TYPE 6

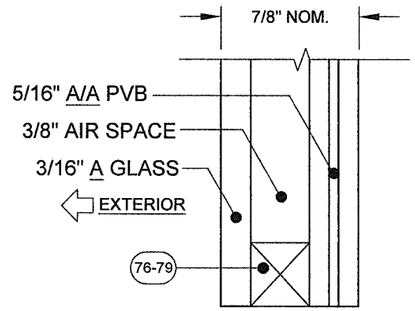


GLASS TYPE 7

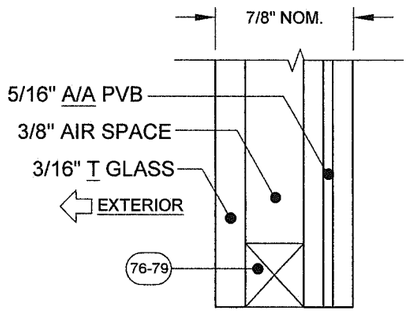


GLASS TYPE 8

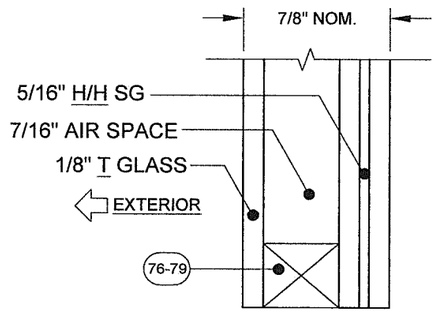


GLASS TYPE 10

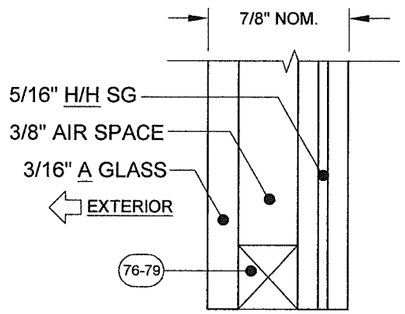


GLASS TYPE 11

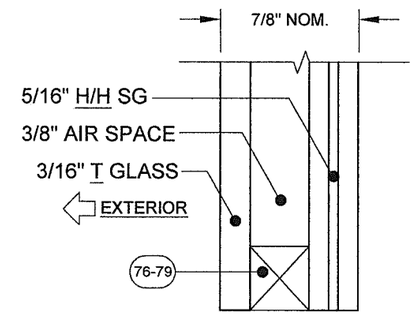


GLASS TYPE 12

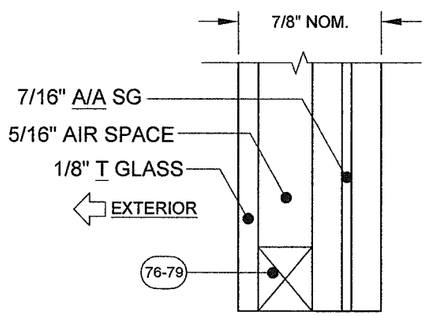


GLASS TYPE 14

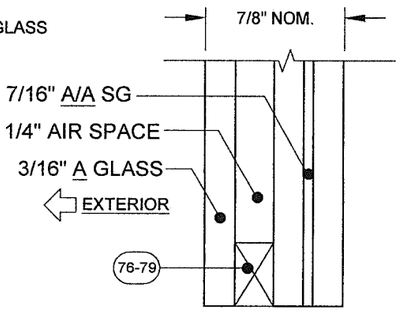


GLASS TYPE 15

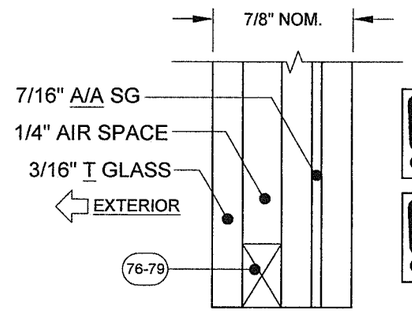


GLASS TYPE 16

GLASS TYPES 5, 7, 11 & 15 MAY NOT BE USED IN THE HVHZ ABOVE 30'.

GLASS TYPES 10-12 & 14-16 MAY NOT BE USED WITH J-CHANNEL OR INTEGRAL FIN FRAMES

| Part # | Description | Material |
|---|---|---|
| 76 | Kommerling 4SG TPS Spacer System | See this Sheet for Materials |
| 77 | Quanex Super Spacer nXT with Hot Melt Butyl | |
| 78 | Quanex Duraseal Spacer | |
| 79 | Cardinal XL Edge Spacer | |

REFERENCE TEST REPORTS: FTL-8717, 8968 & 8970

"A" = ANNEALED
"H" = HEAT STRENGTHENED
"T" = TEMPERED
"PVB" = .090" TROSIFOL® PVB BY KURARAY AMERICA, INC.
"SG" = .090" SENTRYGLAS® INTERLAYER BY KURARAY AMERICA, INC.

FOR LAMINATED GLAZING COMPONENTS, SEE TABLE 1, SHEET 2.

ANTHONY LYNN MILLER LICENSE No. 58705 STATE OF FLORIDA PROFESSIONAL ENGINEER
4/2/20
A. LYNN MILLER, P.E.
P.E.# 58705

PGT®
1070 TECHNOLOGY DRIVE
N. VENICE, FL 34275
(941)-480-1600
REGISTRATION #29296

**PRODUCT REVISED**
**as complying with the Florida Building Code**
**NOA-No.** 20-0406.01
**Expiration Date** 09/24/2025
**By**
**Miami-Dade Product Control**

*Revision:*
C) NO CHANGES THIS SHEET.
AK - 03/27/20

*Description:* GLAZING DETAILS
*Drawn By:* J ROSOWSKI
*Title:* HORIZONTAL ROLLER WINDOW - LM
*Date:* 05/15/15
*Series/Model:* HR-5510
*Scale:* NTS
*Sheet:* 5 OF 18
*Drawing No.* MD-HR5510-01
*Rev:* C

TABLE 5:

| Index to All Design Pressure and Anchor Quantity Tables | | | | | | | | |
|---|---|---|---|---|---|---|---|---|
| Config. | Max. Width | Max. Height | Glass Type | Reinf. Level | Design Pressure | | Anchor Quantity | |
| | | | | | Table # | Sheet # | Table # | Sheet # |
| XO or OX | 75" | 54" | 5 - 8 | 1 | 6 | 6 | 17 | 9 |
| | | 54" | | 2 | 7 | 6 | 18 | 9 |
| | | 63" | | 3 | 8 | 7 | 19 | 10 |
| | | 63" | | 4 | 11 | 8 | 21 | 11 |
| | | 72" | 6 - 8 | 4 | 10 | 8 | 20 | 10 |
| | 75" | 76" | 10 - 12 | 4 | 12 | 8 | 22 | 11 |
| | | | 14 - 16 | 4 | 12 | 8 | 22 | 11 |
| XOX | 120" | 63" | 5 - 8 | 3 | 9 | 7 | 23 | 12 |
| | | | 5 & 6 | 4 | 13 | 8 | 24 | 13 |
| | | | 7 & 8 | 4 | 14 | 8 | 25 | 14 |
| | 140" | 63" | 10 - 12 | 4 | 15 | 8 | 26 | 15 |
| | | | 14 - 16 | 4 | 16 | 8 | 27 | 16 |

TABLE 6:

| Glass Types 5 - 8 | **Design Pressure (lbs/ft$^2$) for XO or OX Windows** |
|---|---|
| Reinf. Level R1 | All Buck Heights up to 54" |
| All Buck Widths up to 75" | +50 / -50 |

SEE TABLE 17 FOR ANCHORAGE

TABLE 7:

| Glass Types 5 - 8 | **Design Pressure (lbs/ft$^2$) for XO or OX Windows** |
|---|---|
| Reinf. Level R2 | All Buck Heights up to 54" |
| All Buck Widths up to 75" | +65 / -70 |

SEE TABLE 18 FOR ANCHORAGE

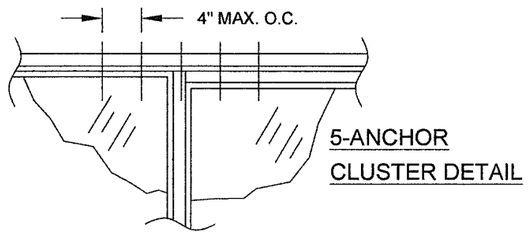


5-ANCHOR CLUSTER DETAIL

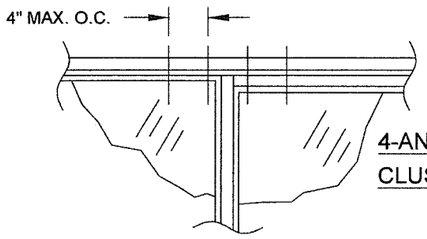


4-ANCHOR CLUSTER DETAIL

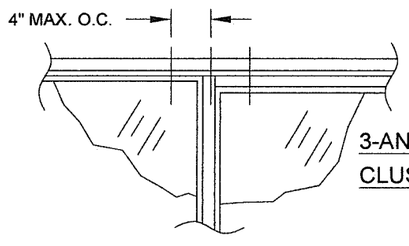


3-ANCHOR CLUSTER DETAIL

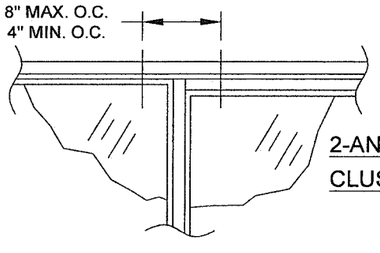


2-ANCHOR CLUSTER DETAIL

SECTION DETAIL FOR WINDOWS WITH LEVEL R1 REINFORCEMENT

(REINFORCEMENTS SHOWN IN FIGURES APPLY TO ALL FRAME TYPES & CONFIGURATIONS)

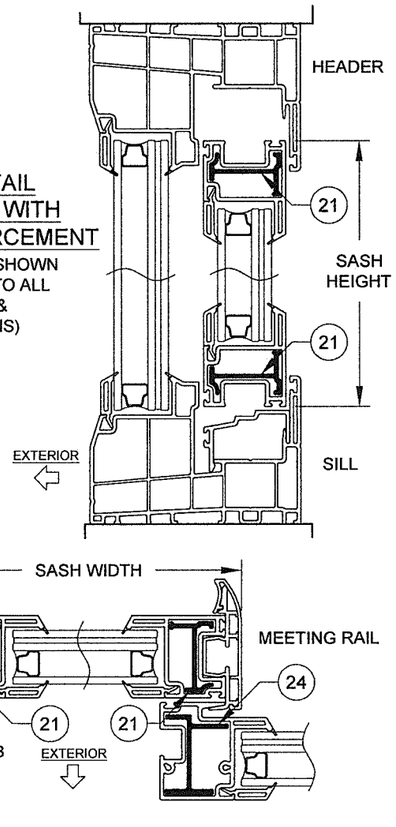


SECTION DETAIL FOR WINDOWS WITH LEVEL R2 REINFORCEMENT

(REINFORCEMENTS SHOWN IN FIGURES APPLY TO ALL FRAME TYPES & CONFIGURATIONS)

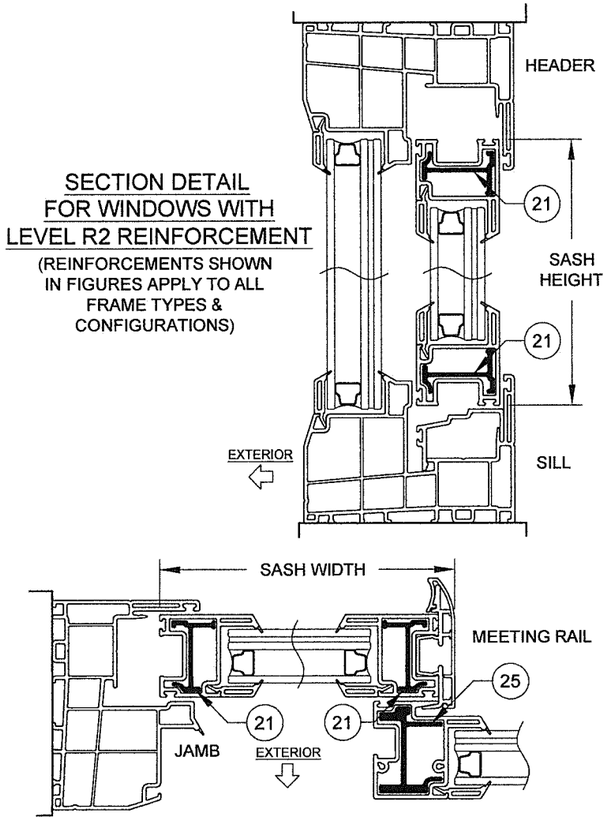


NOTES:
1) USE THESE TABLES FOR ALL WINDOWS INSTALLED THROUGH THE FRAME OR INTEGRAL FIN.
2) FRAME DIMENSIONS ARE BUCK WIDTH AND BUCK HEIGHT (SHEETS 3-4). SASH SIZE IS AS PER THE FIGURE.
3) FOR SIZES NOT SHOWN, ROUND UP TO THE NEXT AVAILABLE WIDTH OR HEIGHT DIMENSION SHOWN ON THE TABLE.
4) "1/4-1/2-1/4" AND "1/3-1/3-1/3" INDICATE THAT THOSE STANDARD SASH CONFIGURATIONS FALL WITHIN THE SASH WIDTH RANGE IN THE ADJACENT COLUMN. "CUSTOM" INDICATES THAT NO STANDARD SASH CONFIGURATIONS FALL WITHIN THE RANGE.

ANTHONY LYNN MILLER LICENSE No. 58705 STATE OF FLORIDA PROFESSIONAL ENGINEER
A. LYNN MILLER, P.E.
P.E.# 58705

PGT®
1070 TECHNOLOGY DRIVE
N. VENICE, FL 34275
(941)-480-1600
REGISTRATION #29296

**Revision:**
C) NO CHANGES THIS SHEET.
AK - 03/27/20

**PRODUCT REVISED**
**as complying with the Florida Building Code**
**NOA–No.** 20-0406.01
**Expiration Date** 09/24/2025
**By**
**Miami–Dade Product Control**

| | | | |
|---|---|---|---|
| **Description:** DESIGN PRESSURE TABLES | | | **Drawn By:** J ROSOWSKI |
| **Title:** HORIZONTAL ROLLER - LM | | | **Date:** 05/15/15 |
| **Series/Model:** HR-5510 | **Scale:** NTS | **Sheet:** 6 OF 18 | **Drawing No.** MD-HR5510-01 / **Rev:** C |

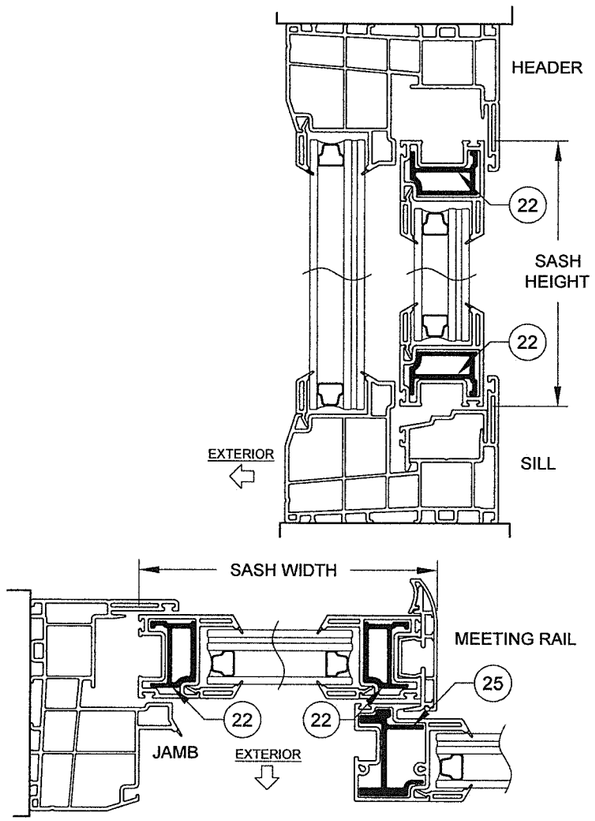


SECTION DETAIL
FOR WINDOWS WITH
LEVEL R3 REINFORCEMENT
(REINFORCEMENTS SHOWN IN FIGURES APPLY TO ALL FRAME TYPES & CONFIGURATIONS)

TABLE 8:

| Glass Types 5 - 8 | **Design Pressure (lbs/ft²) for XO or OX Windows** |
|---|---|
| Reinf. Level R3 | All Buck Heights up to 63" |
| All Buck Widths up to 75" | +50 / -50 |

SEE TABLE 19 FOR ANCHORAGE

TABLE 9:

| Glass Types 5 - 8 / Reinf. Level R3 | | Sash Configuration | Sash Width Range (in) | **Design Pressure (lbs/ft²) for XOX Windows** | | | | | |
|---|---|---|---|---|---|---|---|---|---|
| | | | | Window Buck Height | | | | | |
| | | | | 48" | | 54" | | 63" | |
| Window Buck Width | 35-1/4" | ⅓-⅓-⅓ | 11.391 - 11.391 | +50.0 | -50.0 | +50.0 | -50.0 | +50.0 | -50.0 |
| | 38" | ⅓-⅓-⅓ | 12.308 - 12.308 | +50.0 | -50.0 | +50.0 | -50.0 | +50.0 | -50.0 |
| | 45-1/8" | ¼-½-¼ | 11.391 - 13.397 | +50.0 | -50.0 | +50.0 | -50.0 | +50.0 | -50.0 |
| | | ⅓-⅓-⅓ | 13.398 - 14.683 | +50.0 | -50.0 | +50.0 | -50.0 | +50.0 | -50.0 |
| | 47-3/4" | ¼-½-¼ | 11.391 - 12.297 | +50.0 | -50.0 | +50.0 | -50.0 | +50.0 | -50.0 |
| | | ⅓-⅓-⅓ | 12.298 - 15.558 | +50.0 | -50.0 | +50.0 | -50.0 | +50.0 | -50.0 |
| | 52-1/8" | Custom | 11.391 - 12.016 | +50.0 | -50.0 | +50.0 | -50.0 | +50.0 | -50.0 |
| | | ¼-½-¼ | 12.017 - 13.397 | +50.0 | -50.0 | +50.0 | -50.0 | +50.0 | -50.0 |
| | | ⅓-⅓-⅓ | 13.398 - 17.016 | +50.0 | -50.0 | +50.0 | -50.0 | +50.0 | -50.0 |
| | 60" | Custom | 11.391 - 13.397 | +50.0 | -50.0 | +50.0 | -50.0 | +50.0 | -50.0 |
| | | ¼-½-¼ | 13.398 - 15.360 | +50.0 | -50.0 | +50.0 | -50.0 | +50.0 | -50.0 |
| | | ⅓-⅓-⅓ | 15.361 - 19.641 | +50.0 | -50.0 | +50.0 | -50.0 | +50.0 | -50.0 |
| | 75" | Custom | 11.391 - 13.397 | +50.0 | -50.0 | +50.0 | -50.0 | +50.0 | -50.0 |
| | | ¼-½-¼ | 13.398 - 19.110 | +50.0 | -50.0 | +50.0 | -50.0 | +50.0 | -50.0 |
| | | ⅓-⅓-⅓ | 19.111 - 24.641 | +50.0 | -50.0 | +50.0 | -50.0 | +50.0 | -50.0 |
| | 96" | Custom | 18.360 - 19.397 | +50.0 | -50.0 | +50.0 | -50.0 | +49.1* | -49.1* |
| | | ¼-½-¼ | 19.398 - 24.360 | +50.0 | -50.0 | +50.0 | -50.0 | +50.0 | -50.0 |
| | | Custom | 24.361 - 30.360 | +50.0 | -50.0 | +50.0 | -50.0 | +50.0 | -50.0 |
| | 120" | ¼-½-¼ | ** - 30.360 | +50.0 | -50.0 | +50.0 | -50.0 | +49.1* | -49.1* |

* +50/-50 FOR GLASS TYPES 6-8

SEE TABLE 23 FOR ANCHORAGE

** MIN. SASH SIZE = $\frac{\text{WINDOW WIDTH - 59.28}}{2}$

NOTES:
1) USE THESE TABLES FOR ALL WINDOWS INSTALLED THROUGH THE FRAME OR INTEGRAL FIN.
2) FRAME DIMENSIONS ARE BUCK WIDTH AND BUCK HEIGHT (SEE SHEETS 3-4). SASH SIZE IS AS PER THE FIGURE.
3) FOR SIZES NOT SHOWN, ROUND UP TO THE NEXT AVAILABLE WIDTH OR HEIGHT DIMENSION SHOWN ON THE TABLE.
4)"1/4-1/2-1/4" AND "1/3-1/3-1/3" INDICATE THAT THOSE STANDARD SASH CONFIGURATIONS FALL WITHIN THE SASH WIDTH RANGE IN THE ADJACENT COLUMN. "CUSTOM" INDICATES THAT NO STANDARD SASH CONFIGURATIONS FALL WITHIN THE RANGE.

ANTHONY LYNN MILLER LICENSE No. 58705 STATE OF FLORIDA PROFESSIONAL ENGINEER
4/2/20
A. LYNN MILLER, P.E.
P.E.# 58705

PGT®
1070 TECHNOLOGY DRIVE
N. VENICE, FL 34275
(941)-480-1600
REGISTRATION #29296

**PRODUCT REVISED**
**as complying with the Florida Building Code**
**NOA–No.** 20-0406.01
**Expiration Date** 09/24/2025
**By**
**Miami–Dade Product Control**

| | | | | |
|---|---|---|---|---|
| *Revision:* C) NO CHANGES THIS SHEET. AK - 03/27/20 | | | | |
| *Description:* DESIGN PRESSURE TABLES | | | | *Drawn By:* J ROSOWSKI |
| *Title:* HORIZONTAL ROLLER - LM | | | | *Date:* 05/15/15 |
| *Series/Model:* HR-5510 | *Scale:* NTS | *Sheet:* 7 OF 18 | *Drawing No.* MD-HR5510-01 | *Rev:* C |

TABLE 10:

| Glass Types 6 - 8 | Design Pressure (lbs/ft²) for XO or OX Windows |
|---|---|
| Reinf. Level R4 | All Buck Heights up to 72" |
| All Buck Widths up to 75" | +50 / -50 |

SEE TABLE 20 FOR ANCHORAGE

TABLE 11:

| Glass Types 5 - 8 | | Design Pressure (lbs/ft²) for XO or OX Windows | | | | | |
|---|---|---|---|---|---|---|---|
| Reinf. Level R4 | | Window Buck Height | | | | | |
| | | 48" | | 54" | | 63" | |
| Window Buck Width | 25-1/2" | +65.0 | -70.0 | +65.0 | -70.0 | +65.0 | -70.0 |
| | 28" | +65.0 | -70.0 | +65.0 | -70.0 | +65.0 | -70.0 |
| | 36" | +65.0 | -70.0 | +65.0 | -70.0 | +65.0 | -70.0 |
| | 42" | +65.0 | -70.0 | +65.0 | -70.0 | +65.0 | -70.0 |
| | 48" | +65.0 | -70.0 | +65.0 | -70.0 | +65.0 | -70.0 |
| | 60" | +65.0 | -70.0 | +65.0 | -70.0 | +65.0 | -70.0 |
| | 75" | +65.0 | -70.0 | +65.0 | -70.0 | +64.3* | -64.3* |

* +65/-70 FOR GLASS TYPES 6-8
SEE TABLE 21 FOR ANCHORAGE

TABLE 12:

| Glass Types 10-12 & 14-16 | | Design Pressure (lbs/ft²) for XO or OX Windows | | | | | |
|---|---|---|---|---|---|---|---|
| Reinf. Level R4 | | Window Buck Height | | | | | |
| | | 54" | | 63" | | 76" | |
| Window Buck Width | 25-1/2" | +65.0 | -110.0 | +65.0 | -110.0 | +65.0 | -110.0 |
| | 28" | +65.0 | -110.0 | +65.0 | -110.0 | +65.0 | -110.0 |
| | 36" | +65.0 | -110.0 | +65.0 | -110.0 | +65.0 | -110.0 |
| | 42" | +65.0 | -110.0 | +65.0 | -110.0 | +65.0 | -110.0 |
| | 48" | +65.0 | -110.0 | +65.0 | -110.0 | +65.0 | -110.0 |
| | 60" | +65.0 | -110.0 | +65.0 | -110.0 | +65.0 | -93.9 |
| | 75" | +65.0 | -110.0 | +65.0 | -103.5 | +65.0 | -80.0 |

SEE TABLE 22 FOR ANCHORAGE

TABLE 13:

| Glass Types 5 & 6 | | Sash Configuration | Sash Width Range (in) | Design Pressure (lbs/ft²) for XOX Windows | | | | | | | |
|---|---|---|---|---|---|---|---|---|---|---|---|
| Reinf. Level R4 | | | | Window Buck Height | | | | | | | |
| | | | | 36" | | 48" | | 54" | | 63" | |
| Window Buck Width | 60" | Custom | 11.391 - 13.397 | +65.0 | -70.0 | +65.0 | -70.0 | +65.0 | -70.0 | +65.0 | -65.3 |
| | | ¼-½-¼ | 13.398 - 15.360 | +65.0 | -70.0 | +65.0 | -70.0 | +65.0 | -70.0 | +65.0 | -70.0 |
| | | ⅓-⅓-⅓ | 15.361 - 19.641 | +65.0 | -70.0 | +65.0 | -70.0 | +65.0 | -70.0 | +65.0 | -70.0 |
| | 75" | Custom | 11.391 - 13.397 | +65.0 | -70.0 | +65.0 | -69.6 | +63.3 | -63.3 | +53.2 | -53.2 |
| | | ¼-½-¼ | 13.398 - 19.110 | +65.0 | -70.0 | +65.0 | -70.0 | +65.0 | -66.5 | +56.2 | -56.2 |
| | | ⅓-⅓-⅓ | 19.111 - 24.641 | +65.0 | -70.0 | +65.0 | -70.0 | +65.0 | -70.0 | +65.0 | -66.0 |
| | 96" | Custom | 18.360 - 19.397 | +65.0 | -70.0 | +59.9 | -59.9 | +55.5 | -55.5 | +49.1 | -49.1 |
| | | ¼-½-¼ | 19.398 - 24.360 | +65.0 | -70.0 | +62.1 | -62.1 | +58.0 | -58.0 | +50.3 | -50.3 |
| | | Custom | 24.361 - 30.360 | +65.0 | -70.0 | +65.0 | -70.0 | +65.0 | -67.3 | +57.0 | -57.0 |
| | 120" | ¼-½-¼ | ** - 30.360 | +65.0 | -70.0 | +59.9 | -59.9 | +55.5 | -55.5 | +49.1 | -49.1 |

** MIN. SASH SIZE = $\frac{\text{WINDOW WIDTH - 59.28}}{2}$

SEE TABLE 24 FOR ANCHORAGE

TABLE 14:

| Glass Types 7 & 8 | | Sash Configuration | Sash Width Range (in) | Design Pressure (lbs/ft²) for XOX Windows | | | | | | | |
|---|---|---|---|---|---|---|---|---|---|---|---|
| Reinf. Level R4 | | | | Window Buck Height | | | | | | | |
| | | | | 36" | | 48" | | 54" | | 63" | |
| Window Buck Width | 60" | Custom | 11.391 - 13.397 | +65.0 | -70.0 | +65.0 | -70.0 | +65.0 | -70.0 | +65.0 | -70.0 |
| | | ¼-½-¼ | 13.398 - 15.360 | +65.0 | -70.0 | +65.0 | -70.0 | +65.0 | -70.0 | +65.0 | -70.0 |
| | | ⅓-⅓-⅓ | 15.361 - 19.641 | +65.0 | -70.0 | +65.0 | -70.0 | +65.0 | -70.0 | +65.0 | -70.0 |
| | 75" | Custom | 11.391 - 13.397 | +65.0 | -70.0 | +65.0 | -70.0 | +65.0 | -70.0 | +65.0 | -70.0 |
| | | ¼-½-¼ | 13.398 - 19.110 | +65.0 | -70.0 | +65.0 | -70.0 | +65.0 | -70.0 | +65.0 | -70.0 |
| | | ⅓-⅓-⅓ | 19.111 - 24.641 | +65.0 | -70.0 | +65.0 | -70.0 | +65.0 | -70.0 | +65.0 | -70.0 |
| | 96" | Custom | 18.360 - 19.397 | +65.0 | -70.0 | +65.0 | -70.0 | +65.0 | -70.0 | +65.0* | -67.2* |
| | | ¼-½-¼ | 19.398 - 24.360 | +65.0 | -70.0 | +65.0 | -70.0 | +65.0 | -70.0 | +65.0* | -68.8* |
| | | Custom | 24.361 - 30.360 | +65.0 | -70.0 | +65.0 | -70.0 | +65.0 | -70.0 | +65.0 | -70.0 |
| | 120" | ¼-½-¼ | ** - 30.360 | +65.0 | -70.0 | +65.0 | -70.0 | +65.0 | -70.0 | +65.0* | -67.2* |

* +65/-70 FOR GLASS TYPE 8
** MIN. SASH SIZE = $\frac{\text{WINDOW WIDTH - 59.28}}{2}$

SEE TABLE 25 FOR ANCHORAGE

TABLE 15:

| Glass Types 10 - 12 | | Sash Configuration | Sash Width Range (in) | Design Pressure (lbs/ft²) for XOX Windows | | | | | |
|---|---|---|---|---|---|---|---|---|---|
| Reinf. Level R4 | | | | Window Buck Height | | | | | |
| | | | | 48" | | 54" | | 63" | |
| Window Buck Width | 60" | Custom | 11.391 - 13.397 | +65.0 | -110.0 | +65.0 | -110.0 | +65.0 | -110.0 |
| | | ¼-½-¼ | 13.398 - 15.360 | +65.0 | -110.0 | +65.0 | -110.0 | +65.0 | -110.0 |
| | | ⅓-⅓-⅓ | 15.361 - 19.641 | +65.0 | -110.0 | +65.0 | -110.0 | +65.0 | -110.0 |
| | 75" | Custom | 11.391 - 13.397 | +65.0 | -110.0 | +65.0 | -110.0 | +65.0 | -110.0 |
| | | ¼-½-¼ | 13.398 - 19.110 | +65.0 | -110.0 | +65.0 | -110.0 | +65.0 | -110.0 |
| | | ⅓-⅓-⅓ | 19.111 - 24.641 | +65.0 | -110.0 | +65.0 | -110.0 | +65.0 | -110.0 |
| | 96" | Custom | 17.641 - 19.397 | +65.0 | -110.0 | +65.0 | -110.0 | +65.0* | -104.6* |
| | | ¼-½-¼ | 19.398 - 24.360 | +65.0 | -110.0 | +65.0 | -110.0 | +65.0* | -109.5* |
| | | Custom | 24.361 - 31.641 | +65.0 | -110.0 | +65.0 | -110.0 | +65.0 | -110.0 |
| | 120" | ¼-½-¼ | 29.641 - 32.515 | +65.0 | -110.0 | +65.0 | -110.0 | +65.0* | -104.6* |
| | | ⅓-⅓-⅓ | 32.516 - 39.641 | +65.0 | -110.0 | +65.0 | -110.0 | +65.0 | -110.0 |
| | 140" | Custom | ** - 39.641 | +65.0 | -110.0 | +65.0 | -110.0 | +65.0* | -104.6* |

* +65/-110 FOR GLASS TYPES 11 & 12

SEE TABLE 26 FOR ANCHORAGE

** MIN. SASH SIZE = $\frac{\text{WINDOW WIDTH - 60.72}}{2}$

TABLE 16:

| Glass Types 14 - 16 | | Sash Configuration | Sash Width Range (in) | Design Pressure (lbs/ft²) for XOX Windows | | | | | |
|---|---|---|---|---|---|---|---|---|---|
| Reinf. Level R4 | | | | Window Buck Height | | | | | |
| | | | | 48" | | 54" | | 63" | |
| Window Buck Width | 60" | Custom | 11.391 - 13.397 | +65.0 | -110.0 | +65.0 | -110.0 | +65.0 | -110.0 |
| | | ¼-½-¼ | 13.398 - 15.360 | +65.0 | -110.0 | +65.0 | -110.0 | +65.0 | -110.0 |
| | | ⅓-⅓-⅓ | 15.361 - 19.641 | +65.0 | -110.0 | +65.0 | -110.0 | +65.0 | -110.0 |
| | 75" | Custom | 11.391 - 13.397 | +65.0 | -110.0 | +65.0 | -110.0 | +65.0 | -109.3 |
| | | ¼-½-¼ | 13.398 - 19.110 | +65.0 | -110.0 | +65.0 | -110.0 | +65.0 | -102.0 |
| | | ⅓-⅓-⅓ | 19.111 - 24.641 | +65.0 | -110.0 | +65.0 | -110.0 | +65.0 | -102.9 |
| | 96" | Custom | 17.641 - 19.397 | +65.0 | -110.0 | +65.0 | -110.0 | +65.0 | -97.4 |
| | | ¼-½-¼ | 19.398 - 24.360 | +65.0 | -110.0 | +65.0 | -110.0 | +65.0 | -92.0 |
| | | Custom | 24.361 - 31.641 | +65.0 | -110.0 | +65.0 | -110.0 | +65.0 | -88.4 |
| | 120" | ¼-½-¼ | 29.641 - 32.515 | +65.0 | -110.0 | +65.0 | -109.8 | +65.0 | -84.3 |
| | | ⅓-⅓-⅓ | 32.516 - 39.641 | +65.0 | -110.0 | +65.0 | -105.0 | +65.0 | -80.8 |
| | 140" | Custom | ** - 39.641 | +65.0 | -110.0 | +65.0 | -105.0 | +65.0 | -80.0 |

SEE TABLE 27 FOR ANCHORAGE

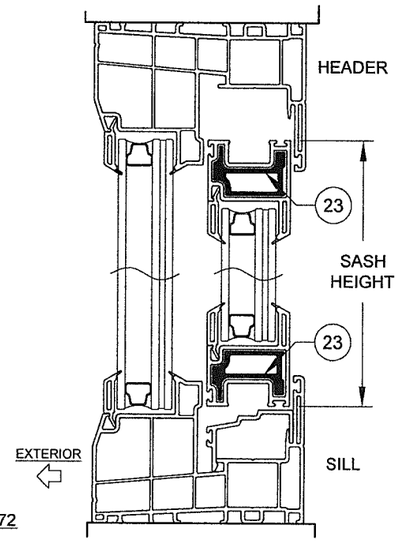


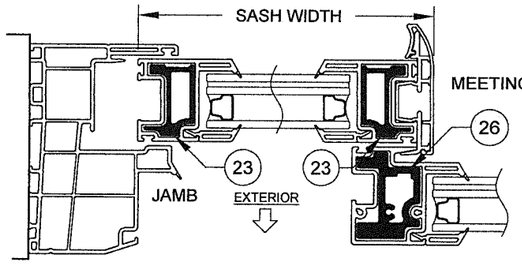


SECTION DETAIL
FOR WINDOWS WITH
LEVEL R4 REINFORCEMENT
(REINFORCEMENTS SHOWN IN FIGURES APPLY TO ALL FRAME TYPES & CONFIGURATIONS)

GLASS TYPES 10-12 & 14-16 MAY NOT BE USED WITH J-CHANNEL OR INTEGRAL FIN FRAMES

NOTES:
1) USE THESE TABLES FOR ALL WINDOWS INSTALLED THROUGH THE FRAME OR INTEGRAL FIN AS ALLOWED BY GLASS TYPE.
2) FRAME DIMENSIONS ARE BUCK WIDTH AND BUCK HEIGHT (SEE SHEETS 3-4). SASH SIZE IS AS PER THE FIGURE.
3) FOR SIZES NOT SHOWN, ROUND UP TO THE NEXT AVAILABLE WIDTH OR HEIGHT DIMENSION SHOWN ON THE TABLE.
4) "1/4-1/2-1/4" AND "1/3-1/3-1/3" INDICATE THAT THOSE STANDARD SASH CONFIGURATIONS FALL WITHIN THE SASH WIDTH RANGE IN THE ADJACENT COLUMN. "CUSTOM" INDICATES THAT NO STANDARD SASH CONFIGURATIONS FALL WITHIN THE RANGE.

ANTHONY LYNN MILLER LICENSE No. 58705 STATE OF FLORIDA PROFESSIONAL ENGINEER
A. LYNN MILLER, P.E.
P.E.# 58705

PGT®
1070 TECHNOLOGY DRIVE
N. VENICE, FL 34275
(941)-480-1600
REGISTRATION #29296

**PRODUCT REVISED**
**as complying with the Florida Building Code**
**NOA-No.** 20-0406.01
**Expiration Date** 09/24/2025
**By** CS
**Miami-Dade Product Control**

*Revision:*
C) NO CHANGES THIS SHEET.
AK - 03/27/20

*Description:* DESIGN PRESSURE TABLES
*Drawn By:* J ROSOWSKI
*Title:* HORIZONTAL ROLLER - LM
*Date:* 05/15/15
*Series/Model:* HR-5510
*Scale:* NTS
*Sheet:* 8 OF 18
*Drawing No.* MD-HR5510-01
*Rev:* C

TABLE 17:

| Glass Types 5 - 8 / Reinf. Level R1 | | Sash Width (in) | Anchor Quantities for XO or OX Windows | | | | | | | | | | | | | | | |
|---|---|---|---|---|---|---|---|---|---|---|---|---|---|---|---|---|---|---|
| | | | 30" Height | | 36" Height | | 48" Height | | 54" Height | | 30" Height | | 36" Height | | 48" Height | | 54" Height | |
| | | | Head & Sill | Jamb | Head & Sill | Jamb | Head & Sill | Jamb | Head & Sill | Jamb | Head & Sill | Jamb | Head & Sill | Jamb | Head & Sill | Jamb | Head & Sill | Jamb |
| | | | Anchor Group A | | | | | | | | Anchor Group C | | | | | | | |
| Window Buck Width | 25-1/2" | 12.147 | 1+C2+1 | 2 | 1+C2+1 | 3 | 1+C2+1 | 3 | 1+C2+1 | 3 | 1+C2+1 | 2 | 1+C2+1 | 3 | 1+C2+1 | 3 | 1+C2+1 | 3 |
| | 28" | 13.397 | 1+C2+1 | 2 | 1+C2+1 | 3 | 1+C2+1 | 3 | 1+C2+1 | 3 | 1+C2+1 | 2 | 1+C2+1 | 3 | 1+C2+1 | 3 | 1+C2+1 | 3 |
| | 36" | 17.397 | 1+C2+1 | 2 | 1+C2+1 | 3 | 1+C2+1 | 3 | 1+C2+1 | 3 | 1+C2+1 | 2 | 1+C2+1 | 3 | 1+C2+1 | 3 | 1+C2+1 | 3 |
| | 42" | 20.397 | 1+C2+1 | 2 | 1+C2+1 | 3 | 1+C2+1 | 3 | 1+C2+1 | 3 | 1+C2+1 | 2 | 1+C2+1 | 3 | 1+C2+1 | 3 | 1+C2+1 | 3 |
| | 48" | 23.397 | 1+C2+1 | 2 | 1+C2+1 | 3 | 1+C2+1 | 3 | 1+C2+1 | 3 | 1+C2+1 | 2 | 1+C2+1 | 3 | 1+C2+1 | 3 | 1+C2+1 | 3 |
| | 60" | 29.397 | 2+C2+2 | 2 | 2+C2+2 | 3 | 2+C2+2 | 3 | 2+C2+2 | 3 | 2+C2+2 | 2 | 2+C2+2 | 3 | 2+C2+2 | 3 | 2+C2+2 | 3 |
| | 75" | 36.897 | 2+C2+2 | 2 | 2+C2+2 | 3 | 2+C2+2 | 3 | 2+C2+2 | 3 | 2+C2+2 | 2 | 2+C2+2 | 3 | 2+C2+2 | 3 | 2+C2+2 | 3 |
| | | | Anchor Group B | | | | | | | | Anchor Group D | | | | | | | |
| Window Buck Width | 25-1/2" | 12.147 | 1+C2+1 | 2 | 1+C2+1 | 3 | 1+C2+1 | 3 | 1+C2+1 | 3 | 1+C2+1 | 2 | 1+C2+1 | 3 | 1+C2+1 | 3 | 1+C2+1 | 3 |
| | 28" | 13.397 | 1+C2+1 | 2 | 1+C2+1 | 3 | 1+C2+1 | 3 | 1+C2+1 | 3 | 1+C2+1 | 2 | 1+C2+1 | 3 | 1+C2+1 | 3 | 1+C2+1 | 3 |
| | 36" | 17.397 | 1+C2+1 | 2 | 1+C2+1 | 3 | 1+C2+1 | 3 | 1+C2+1 | 3 | 1+C2+1 | 2 | 1+C2+1 | 3 | 1+C2+1 | 3 | 1+C2+1 | 3 |
| | 42" | 20.397 | 1+C2+1 | 2 | 1+C2+1 | 3 | 1+C2+1 | 3 | 1+C2+1 | 3 | 1+C2+1 | 2 | 1+C2+1 | 3 | 1+C2+1 | 3 | 1+C2+1 | 3 |
| | 48" | 23.397 | 1+C2+1 | 2 | 1+C2+1 | 3 | 1+C2+1 | 3 | 1+C2+1 | 3 | 1+C2+1 | 2 | 1+C2+1 | 3 | 1+C2+1 | 3 | 1+C2+1 | 3 |
| | 60" | 29.397 | 2+C2+2 | 2 | 2+C2+2 | 3 | 2+C2+2 | 3 | 2+C2+2 | 3 | 2+C2+2 | 2 | 2+C2+2 | 3 | 2+C2+2 | 3 | 2+C2+2 | 3 |
| | 75" | 36.897 | 2+C2+2 | 2 | 2+C2+2 | 3 | 2+C2+2 | 3 | 2+C2+2 | 3 | 2+C2+2 | 2 | 2+C2+2 | 3 | 2+C2+2 | 3 | 2+C2+2 | 3 |

SEE TABLE 6 FOR DESIGN PRESSURE

TABLE 18:

| Glass Types 5 - 8 / Reinf. Level R2 | | Sash Width (in) | Anchor Quantities for XO or OX Windows | | | | | | | | | | | | | | | |
|---|---|---|---|---|---|---|---|---|---|---|---|---|---|---|---|---|---|---|
| | | | 30" Height | | 36" Height | | 48" Height | | 54" Height | | 30" Height | | 36" Height | | 48" Height | | 54" Height | |
| | | | Head & Sill | Jamb | Head & Sill | Jamb | Head & Sill | Jamb | Head & Sill | Jamb | Head & Sill | Jamb | Head & Sill | Jamb | Head & Sill | Jamb | Head & Sill | Jamb |
| | | | Anchor Group A | | | | | | | | Anchor Group C | | | | | | | |
| Window Buck Width | 25-1/2" | 12.147 | Not Allowed | | | | | | | | 1+C2+1 | 2 | 1+C2+1 | 3 | 1+C2+1 | 3 | 1+C2+1 | 3 |
| | 28" | 13.397 | | | | | | | | | 1+C2+1 | 2 | 1+C2+1 | 3 | 1+C2+1 | 3 | 1+C2+1 | 3 |
| | 36" | 17.397 | | | | | | | | | 1+C2+1 | 2 | 1+C2+1 | 3 | 1+C2+1 | 3 | 1+C2+1 | 3 |
| | 42" | 20.397 | | | | | | | | | 1+C2+1 | 2 | 1+C2+1 | 3 | 1+C2+1 | 3 | 1+C2+1 | 3 |
| | 48" | 23.397 | | | | | | | | | 1+C2+1 | 2 | 1+C2+1 | 3 | 1+C2+1 | 3 | 1+C2+1 | 3 |
| | 60" | 29.397 | | | | | | | | | 2+C2+2 | 2 | 2+C2+2 | 3 | 2+C2+2 | 3 | 2+C2+2 | 3 |
| | 75" | 36.897 | | | | | | | | | 2+C2+2 | 2 | 2+C2+2 | 3 | 2+C2+2 | 3 | 2+C2+2 | 3 |
| | | | Anchor Group B | | | | | | | | Anchor Group D | | | | | | | |
| Window Buck Width | 25-1/2" | 12.147 | 1+C2+1 | 2 | 1+C2+1 | 3 | 1+C2+1 | 3 | 1+C2+1 | 3 | 1+C2+1 | 2 | 1+C2+1 | 3 | 1+C2+1 | 3 | 1+C2+1 | 3 |
| | 28" | 13.397 | 1+C2+1 | 2 | 1+C2+1 | 3 | 1+C2+1 | 3 | 1+C2+1 | 3 | 1+C2+1 | 2 | 1+C2+1 | 3 | 1+C2+1 | 3 | 1+C2+1 | 3 |
| | 36" | 17.397 | 1+C2+1 | 2 | 1+C2+1 | 3 | 1+C2+1 | 3 | 1+C2+1 | 3 | 1+C2+1 | 2 | 1+C2+1 | 3 | 1+C2+1 | 3 | 1+C2+1 | 3 |
| | 42" | 20.397 | 1+C2+1 | 2 | 1+C2+1 | 3 | 1+C2+1 | 3 | 1+C2+1 | 3 | 1+C2+1 | 2 | 1+C2+1 | 3 | 1+C2+1 | 3 | 1+C2+1 | 3 |
| | 48" | 23.397 | 1+C2+1 | 2 | 1+C2+1 | 3 | 1+C2+1 | 3 | 1+C2+1 | 3 | 1+C2+1 | 2 | 1+C2+1 | 3 | 1+C2+1 | 3 | 1+C2+1 | 3 |
| | 60" | 29.397 | 2+C2+2 | 2 | 2+C2+2 | 3 | 2+C2+2 | 3 | 2+C2+2 | 3 | 2+C2+2 | 2 | 2+C2+2 | 3 | 2+C2+2 | 3 | 2+C2+2 | 3 |
| | 75" | 36.897 | 2+C2+2 | 2 | 2+C2+2 | 3 | 2+C2+2 | 3 | 2+C2+2 | 3 | 2+C2+2 | 2 | 2+C2+2 | 3 | 2+C2+2 | 3 | 2+C2+2 | 3 |

MINIMUM ANCHOR QUANTITIES SHOWN. ALL ANCHORAGE MUST ALSO COMPLY WITH THE MAX. O.C. SPACING SHOWN ON THE ELEVATIONS.

SEE TABLE 7 FOR DESIGN PRESSURE

| Max. Anchor O.C. Spacing for "Integral-Fin" Installation | Anchor Group E | Anchor Group F |
|---|---|---|
| | 3.8" | 4" |

## GUIDE TO USING ANCHOR QUANTITY TABLES

### FOR OX WINDOWS (XO SIMILAR):

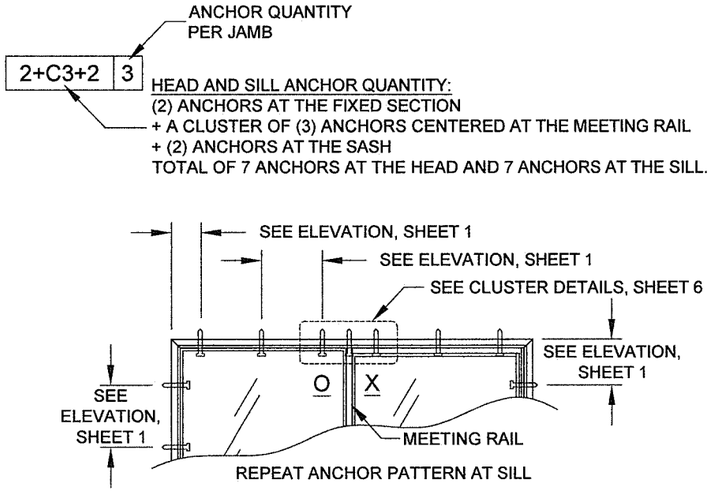


### FOR XOX WINDOWS:

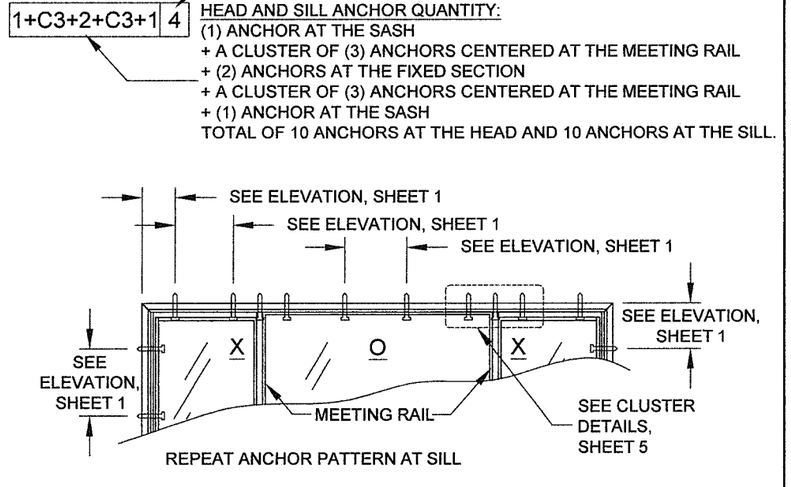


| Max. Anchor O.C. Spacing for "Integral-Fin" Installation | Anchor Group F |
|---|---|
| | 4" |

NOTES:
1) FRAME DIMENSIONS ARE BUCK WIDTH AND BUCK HEIGHT (SEE SHEETS 3-4). SASH SIZE IS AS PER THE FIGURES ON SHEETS 6-8.
2) FOR SIZES NOT SHOWN, ROUND UP TO THE NEXT AVAILABLE WIDTH OR HEIGHT DIMENSION SHOWN ON THE TABLE.

**PRODUCT REVISED**
as complying with the Florida Building Code
NOA-No. 20-0406.01
Expiration Date 09/24/2025
By
Miami-Dade Product Control

Revision: C) NO CHANGES THIS SHEET. AK - 03/27/20


PGT®
1070 TECHNOLOGY DRIVE
N. VENICE, FL 34275
(941)-480-1600
REGISTRATION #29296


| Series | Title | Sheet | Scale | DWG No. | Drawn By | Date | Rev. |
|---|---|---|---|---|---|---|---|
| HR-5510 | ANCHOR QUANTITY TABLES | 9 OF 18 | NTS | MD-HR5510-01 | J ROSOWSKI | 05/15/15 | C |
| | HORIZONTAL ROLLER - LM | | | | | | |

ANTHONY LYNN MILLER LICENSE No. 58705 STATE OF FLORIDA PROFESSIONAL ENGINEER
A. LYNN MILLER, P.E.
P.E.# 58705

TABLE 19:

| Glass Types 5 - 8 / Reinf. Level R3 | | Sash Width (in) | Anchor Quantities for XO or OX Windows | | | | | | | | | | | | | | | | | |
|---|---|---|---|---|---|---|---|---|---|---|---|---|---|---|---|---|---|---|---|---|
| | | | 30" Height | | 36" Height | | 48" Height | | 54" Height | | 63" Height | | 30" Height | | 36" Height | | 48" Height | | 54" Height | | 63" Height | |
| | | | Head & Sill | Jamb | Head & Sill | Jamb | Head & Sill | Jamb | Head & Sill | Jamb | Head & Sill | Jamb | Head & Sill | Jamb | Head & Sill | Jamb | Head & Sill | Jamb | Head & Sill | Jamb | Head & Sill | Jamb |
| | | | Anchor Group A | | | | | | | | | | Anchor Group C | | | | | | | | | |
| Window Buck Width | 25-1/2" | 12.147 | 1+C2+1 | 2 | 1+C2+1 | 3 | 1+C2+1 | 4 | 1+C2+1 | 4 | 1+C2+1 | 4 | 1+C2+1 | 2 | 1+C2+1 | 3 | 1+C2+1 | 4 | 1+C2+1 | 4 | 1+C2+1 | 4 |
| | 28" | 13.397 | 1+C2+1 | 2 | 1+C2+1 | 3 | 1+C2+1 | 4 | 1+C2+1 | 4 | 1+C2+1 | 4 | 1+C2+1 | 2 | 1+C2+1 | 3 | 1+C2+1 | 4 | 1+C2+1 | 4 | 1+C2+1 | 4 |
| | 36" | 17.397 | 1+C2+1 | 2 | 1+C2+1 | 3 | 1+C2+1 | 4 | 1+C2+1 | 4 | 1+C2+1 | 4 | 1+C2+1 | 2 | 1+C2+1 | 3 | 1+C2+1 | 4 | 1+C2+1 | 4 | 1+C2+1 | 4 |
| | 42" | 20.397 | 1+C2+1 | 2 | 1+C2+1 | 3 | 1+C2+1 | 4 | 1+C2+1 | 4 | 1+C2+1 | 4 | 1+C2+1 | 2 | 1+C2+1 | 3 | 1+C2+1 | 4 | 1+C2+1 | 4 | 1+C2+1 | 4 |
| | 48" | 23.397 | 1+C2+1 | 2 | 1+C2+1 | 3 | 1+C2+1 | 4 | 1+C2+1 | 4 | 1+C2+1 | 4 | 1+C2+1 | 2 | 1+C2+1 | 3 | 1+C2+1 | 4 | 1+C2+1 | 4 | 1+C2+1 | 4 |
| | 60" | 29.397 | 2+C2+2 | 2 | 2+C2+2 | 3 | 2+C2+2 | 4 | 2+C2+2 | 4 | 2+C2+2 | 4 | 2+C2+2 | 2 | 2+C2+2 | 3 | 2+C2+2 | 4 | 2+C2+2 | 4 | 2+C2+2 | 4 |
| | 75" | 36.897 | 2+C2+2 | 2 | 2+C2+2 | 3 | 2+C2+2 | 4 | 2+C2+2 | 4 | 2+C3+2 | 4 | 2+C2+2 | 2 | 2+C2+2 | 3 | 2+C2+2 | 4 | 2+C2+2 | 4 | 2+C2+2 | 4 |
| | | | Anchor Group B | | | | | | | | | | Anchor Group D | | | | | | | | | |
| Window Buck Width | 25-1/2" | 12.147 | 1+C2+1 | 2 | 1+C2+1 | 3 | 1+C2+1 | 4 | 1+C2+1 | 4 | 1+C2+1 | 4 | 1+C2+1 | 2 | 1+C2+1 | 3 | 1+C2+1 | 4 | 1+C2+1 | 4 | 1+C2+1 | 4 |
| | 28" | 13.397 | 1+C2+1 | 2 | 1+C2+1 | 3 | 1+C2+1 | 4 | 1+C2+1 | 4 | 1+C2+1 | 4 | 1+C2+1 | 2 | 1+C2+1 | 3 | 1+C2+1 | 4 | 1+C2+1 | 4 | 1+C2+1 | 4 |
| | 36" | 17.397 | 1+C2+1 | 2 | 1+C2+1 | 3 | 1+C2+1 | 4 | 1+C2+1 | 4 | 1+C2+1 | 4 | 1+C2+1 | 2 | 1+C2+1 | 3 | 1+C2+1 | 4 | 1+C2+1 | 4 | 1+C2+1 | 4 |
| | 42" | 20.397 | 1+C2+1 | 2 | 1+C2+1 | 3 | 1+C2+1 | 4 | 1+C2+1 | 4 | 1+C2+1 | 4 | 1+C2+1 | 2 | 1+C2+1 | 3 | 1+C2+1 | 4 | 1+C2+1 | 4 | 1+C2+1 | 4 |
| | 48" | 23.397 | 1+C2+1 | 2 | 1+C2+1 | 3 | 1+C2+1 | 4 | 1+C2+1 | 4 | 1+C2+1 | 4 | 1+C2+1 | 2 | 1+C2+1 | 3 | 1+C2+1 | 4 | 1+C2+1 | 4 | 1+C2+1 | 4 |
| | 60" | 29.397 | 2+C2+2 | 2 | 2+C2+2 | 3 | 2+C2+2 | 4 | 2+C2+2 | 4 | 2+C2+2 | 4 | 2+C2+2 | 2 | 2+C2+2 | 3 | 2+C2+2 | 4 | 2+C2+2 | 4 | 2+C2+2 | 4 |
| | 75" | 36.897 | 2+C2+2 | 2 | 2+C2+2 | 3 | 2+C2+2 | 4 | 2+C2+2 | 4 | 2+C2+2 | 4 | 2+C2+2 | 2 | 2+C2+2 | 3 | 2+C2+2 | 4 | 2+C2+2 | 4 | 2+C2+2 | 4 |

SEE TABLE 8 FOR DESIGN PRESSURE

| Max. Anchor O.C. Spacing for "Integral-Fin" Installation | |
|---|---|
| Anchor Group E | Anchor Group F |
| 3.5" | 4" |

TABLE 20:

| Glass Types 6 - 8 / Reinf. Level R4 | | Sash Width (in) | Anchor Quantities for XO or OX Windows | | | | | | | | | | | | | | | | | |
|---|---|---|---|---|---|---|---|---|---|---|---|---|---|---|---|---|---|---|---|---|
| | | | 30" Height | | 36" Height | | 48" Height | | 54" Height | | 63" Height | | 72" Height | | 30" Height | | 36" Height | | 48" Height | | 54" Height | |
| | | | Head & Sill | Jamb | Head & Sill | Jamb | Head & Sill | Jamb | Head & Sill | Jamb | Head & Sill | Jamb | Head & Sill | Jamb | Head & Sill | Jamb | Head & Sill | Jamb | Head & Sill | Jamb | Head & Sill | Jamb |
| | | | Anchor Group A | | | | | | | | | | | | Anchor Group C | | | | | | | |
| Window Buck Width | 25-1/2" | 12.147 | 1+C2+1 | 2 | 1+C2+1 | 3 | 1+C2+1 | 4 | 1+C2+1 | 4 | 1+C2+1 | 5 | 1+C2+1 | 5 | 1+C2+1 | 2 | 1+C2+1 | 3 | 1+C2+1 | 4 | 1+C2+1 | 4 |
| | 28" | 13.397 | 1+C2+1 | 2 | 1+C2+1 | 3 | 1+C2+1 | 4 | 1+C2+1 | 4 | 1+C2+1 | 5 | 1+C2+1 | 5 | 1+C2+1 | 2 | 1+C2+1 | 3 | 1+C2+1 | 4 | 1+C2+1 | 4 |
| | 36" | 17.397 | 1+C2+1 | 2 | 1+C2+1 | 3 | 1+C2+1 | 4 | 1+C2+1 | 4 | 1+C2+1 | 5 | 1+C3+1 | 5 | 1+C2+1 | 2 | 1+C2+1 | 3 | 1+C2+1 | 4 | 1+C2+1 | 4 |
| | 42" | 20.397 | 1+C2+1 | 2 | 1+C2+1 | 3 | 1+C2+1 | 4 | 1+C2+1 | 4 | 1+C3+1 | 5 | 1+C3+1 | 5 | 1+C2+1 | 2 | 1+C2+1 | 3 | 1+C2+1 | 4 | 1+C2+1 | 4 |
| | 48" | 23.397 | 1+C2+1 | 2 | 1+C2+1 | 3 | 1+C2+1 | 4 | 1+C3+1 | 4 | 1+C3+1 | 5 | 1+C3+1 | 5 | 1+C2+1 | 2 | 1+C2+1 | 3 | 1+C2+1 | 4 | 1+C3+1 | 4 |
| | 60" | 29.397 | 2+C2+2 | 2 | 2+C2+2 | 3 | 2+C2+2 | 4 | 2+C3+2 | 4 | 2+C3+2 | 5 | 2+C4+2 | 5 | 2+C2+2 | 2 | 2+C2+2 | 3 | 2+C2+2 | 4 | 2+C3+2 | 4 |
| | 75" | 36.897 | 2+C2+2 | 2 | 2+C2+2 | 3 | 2+C3+2 | 4 | 2+C3+2 | 4 | 2+C4+2 | 5 | 2+C4+2 | 5 | 2+C2+2 | 2 | 2+C2+2 | 3 | 2+C3+2 | 4 | 2+C3+2 | 4 |
| | | | Anchor Group B | | | | | | | | | | | | Anchor Group D | | | | | | | |
| Window Buck Width | 25-1/2" | 12.147 | 1+C2+1 | 2 | 1+C2+1 | 3 | 1+C2+1 | 4 | 1+C2+1 | 4 | 1+C2+1 | 5 | 1+C2+1 | 5 | 1+C2+1 | 2 | 1+C2+1 | 3 | 1+C2+1 | 4 | 1+C2+1 | 4 |
| | 28" | 13.397 | 1+C2+1 | 2 | 1+C2+1 | 3 | 1+C2+1 | 4 | 1+C2+1 | 4 | 1+C2+1 | 5 | 1+C2+1 | 5 | 1+C2+1 | 2 | 1+C2+1 | 3 | 1+C2+1 | 4 | 1+C2+1 | 4 |
| | 36" | 17.397 | 1+C2+1 | 2 | 1+C2+1 | 3 | 1+C2+1 | 4 | 1+C2+1 | 4 | 1+C2+1 | 5 | 1+C3+1 | 5 | 1+C2+1 | 2 | 1+C2+1 | 3 | 1+C2+1 | 4 | 1+C2+1 | 4 |
| | 42" | 20.397 | 1+C2+1 | 2 | 1+C2+1 | 3 | 1+C2+1 | 4 | 1+C2+1 | 4 | 1+C3+1 | 5 | 1+C3+1 | 5 | 1+C2+1 | 2 | 1+C2+1 | 3 | 1+C2+1 | 4 | 1+C2+1 | 4 |
| | 48" | 23.397 | 1+C2+1 | 2 | 1+C2+1 | 3 | 1+C2+1 | 4 | 1+C3+1 | 4 | 1+C3+1 | 5 | 1+C3+1 | 5 | 1+C2+1 | 2 | 1+C2+1 | 3 | 1+C2+1 | 4 | 1+C3+1 | 4 |
| | 60" | 29.397 | 2+C2+2 | 2 | 2+C2+2 | 3 | 2+C2+2 | 4 | 2+C3+2 | 4 | 2+C3+2 | 5 | 2+C4+2 | 5 | 2+C2+2 | 2 | 2+C2+2 | 3 | 2+C2+2 | 4 | 2+C3+2 | 4 |
| | 75" | 36.897 | 2+C2+2 | 2 | 2+C2+2 | 3 | 2+C3+2 | 4 | 2+C3+2 | 4 | 2+C4+2 | 5 | 2+C4+2 | 5 | 2+C2+2 | 2 | 2+C2+2 | 3 | 2+C3+2 | 4 | 2+C3+2 | 4 |

SEE TABLE 10 FOR DESIGN PRESSURE

| Max. Anchor O.C. Spacing for "Integral-Fin" Installation | |
|---|---|
| Anchor Group E | Anchor Group F |
| 3.2" | 4" |

NOTES:
1) FRAME DIMENSIONS ARE BUCK WIDTH AND BUCK HEIGHT (SEE SHEETS 3-4). SASH SIZE IS AS PER THE FIGURES ON SHEETS 6-8.

2) FOR SIZES NOT SHOWN, ROUND UP TO THE NEXT AVAILABLE WIDTH OR HEIGHT DIMENSION SHOWN ON THE TABLE.

3) SEE SHEET 9 FOR A GUIDE TO USING THESE TABLES.

MINIMUM ANCHOR QUANTITIES SHOWN. ALL ANCHORAGE MUST ALSO COMPLY WITH THE MAX. O.C. SPACING SHOWN ON THE ELEVATIONS.

**PRODUCT REVISED**
**as complying with the Florida Building Code**
**NOA-No.** 20-0406.01
**Expiration Date** 09/24/2025
**By**
**Miami-Dade Product Control**

Revision:
C) NO CHANGES THIS SHEET.
AK - 03/27/20


1070 TECHNOLOGY DRIVE
N. VENICE, FL 34275
(941)-480-1600


| Rev. | Date | Drawn By | DWG No. | Sheet | Scale | Desc. | Series |
|---|---|---|---|---|---|---|---|
| C | 05/15/15 | J ROSOWSKI | MD-HR5510-01 | 10 OF 18 | NTS | HORIZONTAL ROLLER - LM | HR-5510 |

Title: ANCHOR QUANTITY TABLES

PGT® REGISTRATION #29296

ANTHONY LYNN MILLER LICENSE No. 58705 STATE OF FLORIDA PROFESSIONAL ENGINEER
9/2/20
A. LYNN MILLER, P.E.
P.E.# 58705

TABLE 21:

| Glass Types 5 - 8 / Reinf. Level R4 | | Sash Width (in) | Anchor Quantities for XO or OX Windows | | | | | | | | | | | | | | | | | |
|---|---|---|---|---|---|---|---|---|---|---|---|---|---|---|---|---|---|---|---|---|
| | | | 30" Height | | 36" Height | | 48" Height | | 54" Height | | 63" Height | | 30" Height | | 36" Height | | 48" Height | | 54" Height | | 63" Height | |
| | | | Head & Sill | Jamb | Head & Sill | Jamb | Head & Sill | Jamb | Head & Sill | Jamb | Head & Sill | Jamb | Head & Sill | Jamb | Head & Sill | Jamb | Head & Sill | Jamb | Head & Sill | Jamb | Head & Sill | Jamb |
| | | | Anchor Group A | | | | | | | | | | Anchor Group C | | | | | | | | | |
| Window Buck Width | 25-1/2" | 12.147 | Not Allowed | | | | | | | | | | 1+C2+1 | 2 | 1+C2+1 | 3 | 1+C2+1 | 4 | 1+C2+1 | 4 | 1+C2+1 | 4 |
| | 28" | 13.397 | | | | | | | | | | | 1+C2+1 | 2 | 1+C2+1 | 3 | 1+C2+1 | 4 | 1+C2+1 | 4 | 1+C2+1 | 4 |
| | 36" | 17.397 | | | | | | | | | | | 1+C2+1 | 2 | 1+C2+1 | 3 | 1+C2+1 | 4 | 1+C2+1 | 4 | 1+C2+1 | 4 |
| | 42" | 20.397 | | | | | | | | | | | 1+C2+1 | 2 | 1+C2+1 | 3 | 1+C2+1 | 4 | 1+C2+1 | 4 | 1+C2+1 | 4 |
| | 48" | 23.397 | | | | | | | | | | | 1+C2+1 | 2 | 1+C2+1 | 3 | 1+C2+1 | 4 | 1+C2+1 | 4 | 1+C2+1 | 4 |
| | 60" | 29.397 | | | | | | | | | | | 2+C2+2 | 2 | 2+C2+2 | 3 | 2+C2+2 | 4 | 2+C2+2 | 4 | 2+C2+2 | 4 |
| | 75" | 36.897 | | | | | | | | | | | 2+C2+2 | 2 | 2+C2+2 | 3 | 2+C2+2 | 4 | 2+C2+2 | 4 | 2+C3+2 | 4 |
| | | | Anchor Group B | | | | | | | | | | Anchor Group D | | | | | | | | | |
| Window Buck Width | 25-1/2" | 12.147 | 1+C2+1 | 2 | 1+C2+1 | 3 | 1+C2+1 | 4 | 1+C2+1 | 4 | 1+C2+1 | 4 | 1+C2+1 | 2 | 1+C2+1 | 3 | 1+C2+1 | 4 | 1+C2+1 | 4 | 1+C2+1 | 4 |
| | 28" | 13.397 | 1+C2+1 | 2 | 1+C2+1 | 3 | 1+C2+1 | 4 | 1+C2+1 | 4 | 1+C2+1 | 4 | 1+C2+1 | 2 | 1+C2+1 | 3 | 1+C2+1 | 4 | 1+C2+1 | 4 | 1+C2+1 | 4 |
| | 36" | 17.397 | 1+C2+1 | 2 | 1+C2+1 | 3 | 1+C2+1 | 4 | 1+C2+1 | 4 | 1+C2+1 | 4 | 1+C2+1 | 2 | 1+C2+1 | 3 | 1+C2+1 | 4 | 1+C2+1 | 4 | 1+C2+1 | 4 |
| | 42" | 20.397 | 1+C2+1 | 2 | 1+C2+1 | 3 | 1+C2+1 | 4 | 1+C2+1 | 4 | 1+C2+1 | 4 | 1+C2+1 | 2 | 1+C2+1 | 3 | 1+C2+1 | 4 | 1+C2+1 | 4 | 1+C2+1 | 4 |
| | 48" | 23.397 | 1+C2+1 | 2 | 1+C2+1 | 3 | 1+C2+1 | 4 | 1+C2+1 | 4 | 1+C2+1 | 4 | 1+C2+1 | 2 | 1+C2+1 | 3 | 1+C2+1 | 4 | 1+C2+1 | 4 | 1+C2+1 | 4 |
| | 60" | 29.397 | 2+C2+2 | 2 | 2+C2+2 | 3 | 2+C2+2 | 4 | 2+C2+2 | 4 | 2+C3+2 | 4 | 2+C2+2 | 2 | 2+C2+2 | 3 | 2+C2+2 | 4 | 2+C2+2 | 4 | 2+C2+2 | 4 |
| | 75" | 36.897 | 2+C2+2 | 2 | 2+C2+2 | 3 | 2+C2+2 | 4 | 2+C2+2 | 4 | 2+C3+2 | 4 | 2+C2+2 | 2 | 2+C2+2 | 3 | 2+C2+2 | 4 | 2+C2+2 | 4 | 2+C2+2 | 4 |

SEE TABLE 11 FOR DESIGN PRESSURE

| Max. Anchor O.C. Spacing for "Integral-Fin" Installation | Anchor Group F |
|---|---|
| | 4" |

TABLE 22:

| Glass Types 10-12 & 14-16 / Reinf. Level R4 | | Sash Width (in) | Anchor Quantities for XO or OX Windows | | | | | | | | | | | | | | | | | | | |
|---|---|---|---|---|---|---|---|---|---|---|---|---|---|---|---|---|---|---|---|---|---|---|
| | | | 30" Height | | 36" Height | | 48" Height | | 54" Height | | 63" Height | | 76" Height | | 30" Height | | 36" Height | | 48" Height | | 54" Height | | 63" Height | | 76" Height | |
| | | | Head & Sill | Jamb | Head & Sill | Jamb | Head & Sill | Jamb | Head & Sill | Jamb | Head & Sill | Jamb | Head & Sill | Jamb | Head & Sill | Jamb | Head & Sill | Jamb | Head & Sill | Jamb | Head & Sill | Jamb | Head & Sill | Jamb | Head & Sill | Jamb |
| | | | Anchor Group A | | | | | | | | | | | | Anchor Group C | | | | | | | | | | | |
| Window Buck Width | 25-1/2" | 12.147 | Not Allowed | | | | | | | | | | | | 1+C2+1 | 2 | 1+C2+1 | 3 | 1+C2+1 | 4 | 1+C2+1 | 4 | 1+C2+1 | 5 | 1+C3+1 | 5 |
| | 28" | 13.397 | | | | | | | | | | | | | 1+C2+1 | 2 | 1+C2+1 | 3 | 1+C2+1 | 4 | 1+C2+1 | 4 | 1+C3+1 | 5 | 1+C3+1 | 5 |
| | 36" | 17.397 | | | | | | | | | | | | | 1+C2+1 | 2 | 1+C2+1 | 3 | 1+C2+1 | 4 | 1+C3+1 | 4 | 1+C3+1 | 5 | 1+C4+1 | 5 |
| | 42" | 20.397 | | | | | | | | | | | | | 1+C2+1 | 2 | 1+C2+1 | 3 | 1+C3+1 | 4 | 1+C3+1 | 4 | 1+C3+1 | 5 | 1+C4+1 | 5 |
| | 48" | 23.397 | | | | | | | | | | | | | 1+C2+1 | 2 | 1+C2+1 | 3 | 1+C3+1 | 4 | 1+C3+1 | 4 | 1+C4+1 | 5 | 1+C4+1 | 5 |
| | 60" | 29.397 | | | | | | | | | | | | | 2+C2+2 | 2 | 2+C2+2 | 3 | 2+C3+2 | 4 | 2+C3+2 | 4 | 2+C4+2 | 5 | 2+C4+2 | 5 |
| | 75" | 36.897 | | | | | | | | | | | | | 2+C2+2 | 2 | 2+C2+2 | 3 | 2+C3+2 | 4 | 2+C4+2 | 4 | 2+C4+2 | 5 | 2+C4+2 | 5 |
| | | | Anchor Group B | | | | | | | | | | | | Anchor Group D | | | | | | | | | | | |
| Window Buck Width | 25-1/2" | 12.147 | 1+C2+1 | 2 | 1+C2+1 | 3 | 1+C2+1 | 4 | 1+C2+1 | 4 | 1+C2+1 | 5 | 1+C3+1 | 5 | 1+C2+1 | 2 | 1+C2+1 | 3 | 1+C2+1 | 4 | 1+C2+1 | 4 | 1+C2+1 | 5 | 1+C3+1 | 5 |
| | 28" | 13.397 | 1+C2+1 | 2 | 1+C2+1 | 3 | 1+C2+1 | 4 | 1+C2+1 | 4 | 1+C3+1 | 5 | 1+C3+1 | 5 | 1+C2+1 | 2 | 1+C2+1 | 3 | 1+C2+1 | 4 | 1+C2+1 | 4 | 1+C3+1 | 5 | 1+C3+1 | 5 |
| | 36" | 17.397 | 1+C2+1 | 2 | 1+C2+1 | 3 | 1+C2+1 | 4 | 1+C3+1 | 4 | 1+C3+1 | 5 | 1+C4+1 | 5 | 1+C2+1 | 2 | 1+C2+1 | 3 | 1+C2+1 | 4 | 1+C3+1 | 4 | 1+C3+1 | 5 | 1+C4+1 | 5 |
| | 42" | 20.397 | 1+C2+1 | 2 | 1+C2+1 | 3 | 1+C3+1 | 4 | 1+C3+1 | 4 | 1+C3+1 | 5 | 1+C4+1 | 5 | 1+C2+1 | 2 | 1+C2+1 | 3 | 1+C3+1 | 4 | 1+C3+1 | 4 | 1+C3+1 | 5 | 1+C4+1 | 5 |
| | 48" | 23.397 | 1+C2+1 | 2 | 1+C2+1 | 3 | 1+C3+1 | 4 | 1+C3+1 | 4 | 1+C4+1 | 5 | 1+C4+1 | 5 | 1+C2+1 | 2 | 1+C2+1 | 3 | 1+C3+1 | 4 | 1+C3+1 | 4 | 1+C4+1 | 5 | 1+C4+1 | 5 |
| | 60" | 29.397 | 2+C2+2 | 2 | 2+C2+2 | 3 | 2+C3+2 | 4 | 2+C3+2 | 4 | 2+C4+2 | 5 | 2+C4+2 | 5 | 2+C2+2 | 2 | 2+C2+2 | 3 | 2+C3+2 | 4 | 2+C3+2 | 4 | 2+C4+2 | 5 | 2+C4+2 | 5 |
| | 75" | 36.897 | 2+C2+2 | 2 | 2+C2+2 | 3 | 2+C3+2 | 4 | 2+C4+2 | 4 | 2+C4+2 | 5 | 2+C4+2 | 5 | 2+C2+2 | 2 | 2+C2+2 | 3 | 2+C3+2 | 4 | 2+C4+2 | 4 | 2+C4+2 | 5 | 2+C4+2 | 5 |

SEE TABLE 12 FOR DESIGN PRESSURE

MINIMUM ANCHOR QUANTITIES SHOWN. ALL ANCHORAGE MUST ALSO COMPLY WITH THE MAX. O.C. SPACING SHOWN ON THE ELEVATIONS.

GLASS TYPES 10-12 & 14-16 MAY NOT BE USED WITH J-CHANNEL OR INTEGRAL FIN FRAMES

NOTES:

1) FRAME DIMENSIONS ARE BUCK WIDTH AND BUCK HEIGHT (SEE SHEETS 3-4). SASH SIZE IS AS PER THE FIGURES ON SHEETS 6-8.

2) FOR SIZES NOT SHOWN, ROUND UP TO THE NEXT AVAILABLE WIDTH OR HEIGHT DIMENSION SHOWN ON THE TABLE.

3) SEE SHEET 9 FOR A GUIDE TO USING THESE TABLES.

**PRODUCT REVISED**
**as complying with the Florida Building Code**
**NOA-No.** 20-0406.01
**Expiration Date** 09/24/2025
**By**
**Miami-Dade Product Control**

Revision: C) NO CHANGES THIS SHEET. AK - 03/27/20

1070 TECHNOLOGY DRIVE
N. VENICE, FL 34275
(941)-480-1600

REGISTRATION #29296

| Series | Desc. | Title |
|---|---|---|
| HR-5510 | HORIZONTAL ROLLER - LM | ANCHOR QUANTITY TABLES |

| Scale | Sheet | DWG No. | Drawn By | Date | Rev. |
|---|---|---|---|---|---|
| NTS | 11 OF 18 | MD-HR5510-01 | J ROSOWSKI | 05/15/15 | C |

ANTHONY LYNN MILLER LICENSE No. 58705 STATE OF FLORIDA PROFESSIONAL ENGINEER
4/2/20
A. LYNN MILLER, P.E.
P.E.# 58705

TABLE 23:

MINIMUM ANCHOR QUANTITIES SHOWN. ALL ANCHORAGE MUST ALSO COMPLY WITH THE MAX. O.C. SPACING SHOWN ON THE ELEVATIONS.

## Anchor Quantities for XOX Windows

| Glass Types 5 - 8 / Reinf. Level R3 | | Sash Configuration | Sash Width Range (in) | 24" Height | | 30" Height | | 36" Height | | 48" Height | | 54" Height | | 63" Height | |
|---|---|---|---|---|---|---|---|---|---|---|---|---|---|---|---|
| | | | | Head & Sill | Jamb | Head & Sill | Jamb | Head & Sill | Jamb | Head & Sill | Jamb | Head & Sill | Jamb | Head & Sill | Jamb |
| **Anchor Group A** | | | | | | | | | | | | | | | |
| Window Buck Width | 35-1/4" | ⅓-⅓-⅓ | 11.391 - 11.391 | 1+C2+0+C2+1 | 2 | 1+C2+0+C2+1 | 2 | 1+C2+0+C2+1 | 3 | 1+C2+0+C2+1 | 4 | 1+C2+0+C2+1 | 4 | 1+C2+0+C2+1 | 4 |
| | 38" | ⅓-⅓-⅓ | 12.308 - 12.308 | 1+C2+0+C2+1 | 2 | 1+C2+0+C2+1 | 2 | 1+C2+0+C2+1 | 3 | 1+C2+0+C2+1 | 4 | 1+C2+0+C2+1 | 4 | 1+C2+0+C2+1 | 4 |
| | 45-1/8" | ¼-½-¼ | 11.391 - 13.397 | 1+C2+0+C2+1 | 2 | 1+C2+0+C2+1 | 2 | 1+C2+0+C2+1 | 3 | 1+C2+0+C2+1 | 4 | 1+C2+0+C2+1 | 4 | 1+C2+0+C2+1 | 4 |
| | | ⅓-⅓-⅓ | 13.398 - 14.683 | 1+C2+0+C2+1 | 2 | 1+C2+0+C2+1 | 2 | 1+C2+0+C2+1 | 3 | 1+C2+0+C2+1 | 4 | 1+C2+0+C2+1 | 4 | 1+C2+0+C2+1 | 4 |
| | 47-3/4" | ¼-½-¼ | 11.391 - 12.297 | 1+C2+1+C2+1 | 2 | 1+C2+1+C2+1 | 2 | 1+C2+1+C2+1 | 3 | 1+C2+1+C2+1 | 4 | 1+C2+1+C2+1 | 4 | 1+C2+1+C2+1 | 4 |
| | | ⅓-⅓-⅓ | 12.298 - 15.558 | 1+C2+0+C2+1 | 2 | 1+C2+0+C2+1 | 2 | 1+C2+0+C2+1 | 3 | 1+C2+0+C2+1 | 4 | 1+C2+0+C2+1 | 4 | 1+C2+0+C2+1 | 4 |
| | 52-1/8" | Custom | 11.391 - 12.016 | 1+C2+1+C2+1 | 2 | 1+C2+1+C2+1 | 2 | 1+C2+1+C2+1 | 3 | 1+C2+1+C2+1 | 4 | 1+C2+1+C2+1 | 4 | 1+C2+1+C2+1 | 4 |
| | | ¼-½-¼ | 12.017 - 13.397 | 1+C2+1+C2+1 | 2 | 1+C2+1+C2+1 | 2 | 1+C2+1+C2+1 | 3 | 1+C2+1+C2+1 | 4 | 1+C2+1+C2+1 | 4 | 1+C2+1+C2+1 | 4 |
| | | ⅓-⅓-⅓ | 13.398 - 17.016 | 1+C2+0+C2+1 | 2 | 1+C2+0+C2+1 | 2 | 1+C2+0+C2+1 | 3 | 1+C2+0+C2+1 | 4 | 1+C2+0+C2+1 | 4 | 1+C2+0+C2+1 | 4 |
| | 60" | Custom | 11.391 - 13.397 | 1+C2+1+C2+1 | 2 | 1+C2+1+C2+1 | 2 | 1+C2+1+C2+1 | 3 | 1+C2+1+C2+1 | 4 | 1+C2+1+C2+1 | 4 | 1+C2+1+C2+1 | 4 |
| | | ¼-½-¼ | 13.398 - 15.360 | 1+C2+1+C2+1 | 2 | 1+C2+1+C2+1 | 2 | 1+C2+1+C2+1 | 3 | 1+C2+1+C2+1 | 4 | 1+C2+1+C2+1 | 4 | 1+C2+1+C2+1 | 4 |
| | | ⅓-⅓-⅓ | 15.361 - 19.641 | 1+C2+0+C2+1 | 2 | 1+C2+0+C2+1 | 2 | 1+C2+0+C2+1 | 3 | 1+C2+0+C2+1 | 4 | 1+C2+0+C2+1 | 4 | 1+C2+0+C2+1 | 4 |
| | 75" | Custom | 11.391 - 13.397 | 1+C2+3+C2+1 | 2 | 1+C2+3+C2+1 | 2 | 1+C2+3+C2+1 | 3 | 1+C2+3+C2+1 | 4 | 1+C2+3+C2+1 | 4 | 1+C2+3+C2+1 | 4 |
| | | ¼-½-¼ | 13.398 - 19.110 | 1+C2+2+C2+1 | 2 | 1+C2+2+C2+1 | 2 | 1+C2+2+C2+1 | 3 | 1+C2+2+C2+1 | 4 | 1+C2+2+C2+1 | 4 | 1+C2+2+C2+1 | 4 |
| | | ⅓-⅓-⅓ | 19.111 - 24.641 | 1+C2+1+C2+1 | 2 | 1+C2+1+C2+1 | 2 | 1+C2+1+C2+1 | 3 | 1+C2+1+C2+1 | 4 | 1+C2+1+C2+1 | 4 | 1+C2+1+C2+1 | 4 |
| | 96" | Custom | 18.360 - 19.397 | 1+C2+3+C2+1 | 2 | 1+C2+3+C2+1 | 2 | 1+C2+3+C2+1 | 3 | 1+C2+3+C2+1 | 4 | 1+C2+3+C2+1 | 4 | 1+C3+3+C3+1 | 4 |
| | | ¼-½-¼ | 19.398 - 24.360 | 1+C2+3+C2+1 | 2 | 1+C2+3+C2+1 | 2 | 1+C2+3+C2+1 | 3 | 1+C2+3+C2+1 | 4 | 1+C2+3+C2+1 | 4 | 1+C3+3+C3+1 | 4 |
| | | Custom | 24.361 - 30.360 | 1+C2+2+C2+1 | 2 | 1+C2+2+C2+1 | 2 | 1+C2+2+C2+1 | 3 | 1+C2+2+C2+1 | 4 | 1+C2+2+C2+1 | 4 | 1+C3+2+C3+1 | 4 |
| | 120" | ¼-½-¼ | ** - 30.360 | 1+C2+3+C2+1 | 2 | 1+C2+3+C2+1 | 2 | 1+C2+3+C2+1 | 3 | 1+C2+3+C2+1 | 4 | 1+C2+3+C2+1 | 4 | 1+C3+3+C3+1 | 4 |
| **Anchor Group B** | | | | | | | | | | | | | | | |
| Window Buck Width | 35-1/4" | ⅓-⅓-⅓ | 11.391 - 11.391 | 1+C2+0+C2+1 | 2 | 1+C2+0+C2+1 | 2 | 1+C2+0+C2+1 | 3 | 1+C2+0+C2+1 | 4 | 1+C2+0+C2+1 | 4 | 1+C2+0+C2+1 | 4 |
| | 38" | ⅓-⅓-⅓ | 12.308 - 12.308 | 1+C2+0+C2+1 | 2 | 1+C2+0+C2+1 | 2 | 1+C2+0+C2+1 | 3 | 1+C2+0+C2+1 | 4 | 1+C2+0+C2+1 | 4 | 1+C2+0+C2+1 | 4 |
| | 45-1/8" | ¼-½-¼ | 11.391 - 13.397 | 1+C2+0+C2+1 | 2 | 1+C2+0+C2+1 | 2 | 1+C2+0+C2+1 | 3 | 1+C2+0+C2+1 | 4 | 1+C2+0+C2+1 | 4 | 1+C2+0+C2+1 | 4 |
| | | ⅓-⅓-⅓ | 13.398 - 14.683 | 1+C2+0+C2+1 | 2 | 1+C2+0+C2+1 | 2 | 1+C2+0+C2+1 | 3 | 1+C2+0+C2+1 | 4 | 1+C2+0+C2+1 | 4 | 1+C2+0+C2+1 | 4 |
| | 47-3/4" | ¼-½-¼ | 11.391 - 12.297 | 1+C2+1+C2+1 | 2 | 1+C2+1+C2+1 | 2 | 1+C2+1+C2+1 | 3 | 1+C2+1+C2+1 | 4 | 1+C2+1+C2+1 | 4 | 1+C2+1+C2+1 | 4 |
| | | ⅓-⅓-⅓ | 12.298 - 15.558 | 1+C2+0+C2+1 | 2 | 1+C2+0+C2+1 | 2 | 1+C2+0+C2+1 | 3 | 1+C2+0+C2+1 | 4 | 1+C2+0+C2+1 | 4 | 1+C2+0+C2+1 | 4 |
| | 52-1/8" | Custom | 11.391 - 12.016 | 1+C2+1+C2+1 | 2 | 1+C2+1+C2+1 | 2 | 1+C2+1+C2+1 | 3 | 1+C2+1+C2+1 | 4 | 1+C2+1+C2+1 | 4 | 1+C2+1+C2+1 | 4 |
| | | ¼-½-¼ | 12.017 - 13.397 | 1+C2+1+C2+1 | 2 | 1+C2+1+C2+1 | 2 | 1+C2+1+C2+1 | 3 | 1+C2+1+C2+1 | 4 | 1+C2+1+C2+1 | 4 | 1+C2+1+C2+1 | 4 |
| | | ⅓-⅓-⅓ | 13.398 - 17.016 | 1+C2+0+C2+1 | 2 | 1+C2+0+C2+1 | 2 | 1+C2+0+C2+1 | 3 | 1+C2+0+C2+1 | 4 | 1+C2+0+C2+1 | 4 | 1+C2+0+C2+1 | 4 |
| | 60" | Custom | 11.391 - 13.397 | 1+C2+1+C2+1 | 2 | 1+C2+1+C2+1 | 2 | 1+C2+1+C2+1 | 3 | 1+C2+1+C2+1 | 4 | 1+C2+1+C2+1 | 4 | 1+C2+1+C2+1 | 4 |
| | | ¼-½-¼ | 13.398 - 15.360 | 1+C2+1+C2+1 | 2 | 1+C2+1+C2+1 | 2 | 1+C2+1+C2+1 | 3 | 1+C2+1+C2+1 | 4 | 1+C2+1+C2+1 | 4 | 1+C2+1+C2+1 | 4 |
| | | ⅓-⅓-⅓ | 15.361 - 19.641 | 1+C2+0+C2+1 | 2 | 1+C2+0+C2+1 | 2 | 1+C2+0+C2+1 | 3 | 1+C2+0+C2+1 | 4 | 1+C2+0+C2+1 | 4 | 1+C2+0+C2+1 | 4 |
| | 75" | Custom | 11.391 - 13.397 | 1+C2+3+C2+1 | 2 | 1+C2+3+C2+1 | 2 | 1+C2+3+C2+1 | 3 | 1+C2+3+C2+1 | 4 | 1+C2+3+C2+1 | 4 | 1+C2+3+C2+1 | 4 |
| | | ¼-½-¼ | 13.398 - 19.110 | 1+C2+2+C2+1 | 2 | 1+C2+2+C2+1 | 2 | 1+C2+2+C2+1 | 3 | 1+C2+2+C2+1 | 4 | 1+C2+2+C2+1 | 4 | 1+C2+2+C2+1 | 4 |
| | | ⅓-⅓-⅓ | 19.111 - 24.641 | 1+C2+1+C2+1 | 2 | 1+C2+1+C2+1 | 2 | 1+C2+1+C2+1 | 3 | 1+C2+1+C2+1 | 4 | 1+C2+1+C2+1 | 4 | 1+C2+1+C2+1 | 4 |
| | 96" | Custom | 18.360 - 19.397 | 1+C2+3+C2+1 | 2 | 1+C2+3+C2+1 | 2 | 1+C2+3+C2+1 | 3 | 1+C2+3+C2+1 | 4 | 1+C2+3+C2+1 | 4 | 1+C2+3+C2+1 | 4 |
| | | ¼-½-¼ | 19.398 - 24.360 | 1+C2+3+C2+1 | 2 | 1+C2+3+C2+1 | 2 | 1+C2+3+C2+1 | 3 | 1+C2+3+C2+1 | 4 | 1+C2+3+C2+1 | 4 | 1+C2+3+C2+1 | 4 |
| | | Custom | 24.361 - 30.360 | 1+C2+2+C2+1 | 2 | 1+C2+2+C2+1 | 2 | 1+C2+2+C2+1 | 3 | 1+C2+2+C2+1 | 4 | 1+C2+2+C2+1 | 4 | 1+C2+2+C2+1 | 4 |
| | 120" | ¼-½-¼ | ** - 30.360 | 1+C2+3+C2+1 | 2 | 1+C2+3+C2+1 | 2 | 1+C2+3+C2+1 | 3 | 1+C2+3+C2+1 | 4 | 1+C2+3+C2+1 | 4 | 1+C2+3+C2+1 | 4 |

| Glass Types 5 - 8 / Reinf. Level R3 | | Sash Configuration | Sash Width Range (in) | 24" Height | | 30" Height | | 36" Height | | 48" Height | | 54" Height | | 63" Height | |
|---|---|---|---|---|---|---|---|---|---|---|---|---|---|---|---|
| | | | | Head & Sill | Jamb | Head & Sill | Jamb | Head & Sill | Jamb | Head & Sill | Jamb | Head & Sill | Jamb | Head & Sill | Jamb |
| **Anchor Group C** | | | | | | | | | | | | | | | |
| Window Buck Width | 35-1/4" | ⅓-⅓-⅓ | 11.391 - 11.391 | 1+C2+0+C2+1 | 2 | 1+C2+0+C2+1 | 2 | 1+C2+0+C2+1 | 3 | 1+C2+0+C2+1 | 4 | 1+C2+0+C2+1 | 4 | 1+C2+0+C2+1 | 4 |
| | 38" | ⅓-⅓-⅓ | 12.308 - 12.308 | 1+C2+0+C2+1 | 2 | 1+C2+0+C2+1 | 2 | 1+C2+0+C2+1 | 3 | 1+C2+0+C2+1 | 4 | 1+C2+0+C2+1 | 4 | 1+C2+0+C2+1 | 4 |
| | 45-1/8" | ¼-½-¼ | 11.391 - 13.397 | 1+C2+0+C2+1 | 2 | 1+C2+0+C2+1 | 2 | 1+C2+0+C2+1 | 3 | 1+C2+0+C2+1 | 4 | 1+C2+0+C2+1 | 4 | 1+C2+0+C2+1 | 4 |
| | | ⅓-⅓-⅓ | 13.398 - 14.683 | 1+C2+0+C2+1 | 2 | 1+C2+0+C2+1 | 2 | 1+C2+0+C2+1 | 3 | 1+C2+0+C2+1 | 4 | 1+C2+0+C2+1 | 4 | 1+C2+0+C2+1 | 4 |
| | 47-3/4" | ¼-½-¼ | 11.391 - 12.297 | 1+C2+1+C2+1 | 2 | 1+C2+1+C2+1 | 2 | 1+C2+1+C2+1 | 3 | 1+C2+1+C2+1 | 4 | 1+C2+1+C2+1 | 4 | 1+C2+1+C2+1 | 4 |
| | | ⅓-⅓-⅓ | 12.298 - 15.558 | 1+C2+0+C2+1 | 2 | 1+C2+0+C2+1 | 2 | 1+C2+0+C2+1 | 3 | 1+C2+0+C2+1 | 4 | 1+C2+0+C2+1 | 4 | 1+C2+0+C2+1 | 4 |
| | 52-1/8" | Custom | 11.391 - 12.016 | 1+C2+1+C2+1 | 2 | 1+C2+1+C2+1 | 2 | 1+C2+1+C2+1 | 3 | 1+C2+1+C2+1 | 4 | 1+C2+1+C2+1 | 4 | 1+C2+1+C2+1 | 4 |
| | | ¼-½-¼ | 12.017 - 13.397 | 1+C2+1+C2+1 | 2 | 1+C2+1+C2+1 | 2 | 1+C2+1+C2+1 | 3 | 1+C2+1+C2+1 | 4 | 1+C2+1+C2+1 | 4 | 1+C2+1+C2+1 | 4 |
| | | ⅓-⅓-⅓ | 13.398 - 17.016 | 1+C2+0+C2+1 | 2 | 1+C2+0+C2+1 | 2 | 1+C2+0+C2+1 | 3 | 1+C2+0+C2+1 | 4 | 1+C2+0+C2+1 | 4 | 1+C2+0+C2+1 | 4 |
| | 60" | Custom | 11.391 - 13.397 | 1+C2+1+C2+1 | 2 | 1+C2+1+C2+1 | 2 | 1+C2+1+C2+1 | 3 | 1+C2+1+C2+1 | 4 | 1+C2+1+C2+1 | 4 | 1+C2+1+C2+1 | 4 |
| | | ¼-½-¼ | 13.398 - 15.360 | 1+C2+1+C2+1 | 2 | 1+C2+1+C2+1 | 2 | 1+C2+1+C2+1 | 3 | 1+C2+1+C2+1 | 4 | 1+C2+1+C2+1 | 4 | 1+C2+1+C2+1 | 4 |
| | | ⅓-⅓-⅓ | 15.361 - 19.641 | 1+C2+0+C2+1 | 2 | 1+C2+0+C2+1 | 2 | 1+C2+0+C2+1 | 3 | 1+C2+0+C2+1 | 4 | 1+C2+0+C2+1 | 4 | 1+C2+0+C2+1 | 4 |
| | 75" | Custom | 11.391 - 13.397 | 1+C2+3+C2+1 | 2 | 1+C2+3+C2+1 | 2 | 1+C2+3+C2+1 | 3 | 1+C2+3+C2+1 | 4 | 1+C2+3+C2+1 | 4 | 1+C2+3+C2+1 | 4 |
| | | ¼-½-¼ | 13.398 - 19.110 | 1+C2+2+C2+1 | 2 | 1+C2+2+C2+1 | 2 | 1+C2+2+C2+1 | 3 | 1+C2+2+C2+1 | 4 | 1+C2+2+C2+1 | 4 | 1+C2+2+C2+1 | 4 |
| | | ⅓-⅓-⅓ | 19.111 - 24.641 | 1+C2+1+C2+1 | 2 | 1+C2+1+C2+1 | 2 | 1+C2+1+C2+1 | 3 | 1+C2+1+C2+1 | 4 | 1+C2+1+C2+1 | 4 | 1+C2+1+C2+1 | 4 |
| | 96" | Custom | 18.360 - 19.397 | 1+C2+3+C2+1 | 2 | 1+C2+3+C2+1 | 2 | 1+C2+3+C2+1 | 3 | 1+C2+3+C2+1 | 4 | 1+C2+3+C2+1 | 4 | 1+C2+3+C2+1 | 4 |
| | | ¼-½-¼ | 19.398 - 24.360 | 1+C2+3+C2+1 | 2 | 1+C2+3+C2+1 | 2 | 1+C2+3+C2+1 | 3 | 1+C2+3+C2+1 | 4 | 1+C2+3+C2+1 | 4 | 1+C2+3+C2+1 | 4 |
| | | Custom | 24.361 - 30.360 | 1+C2+2+C2+1 | 2 | 1+C2+2+C2+1 | 2 | 1+C2+2+C2+1 | 3 | 1+C2+2+C2+1 | 4 | 1+C2+2+C2+1 | 4 | 1+C2+2+C2+1 | 4 |
| | 120" | ¼-½-¼ | ** - 30.360 | 1+C2+3+C2+1 | 2 | 1+C2+3+C2+1 | 2 | 1+C2+3+C2+1 | 3 | 1+C2+3+C2+1 | 4 | 1+C2+3+C2+1 | 4 | 1+C2+3+C2+1 | 4 |
| **Anchor Group D** | | | | | | | | | | | | | | | |
| Window Buck Width | 35-1/4" | ⅓-⅓-⅓ | 11.391 - 11.391 | 1+C2+0+C2+1 | 2 | 1+C2+0+C2+1 | 2 | 1+C2+0+C2+1 | 3 | 1+C2+0+C2+1 | 4 | 1+C2+0+C2+1 | 4 | 1+C2+0+C2+1 | 4 |
| | 38" | ⅓-⅓-⅓ | 12.308 - 12.308 | 1+C2+0+C2+1 | 2 | 1+C2+0+C2+1 | 2 | 1+C2+0+C2+1 | 3 | 1+C2+0+C2+1 | 4 | 1+C2+0+C2+1 | 4 | 1+C2+0+C2+1 | 4 |
| | 45-1/8" | ¼-½-¼ | 11.391 - 13.397 | 1+C2+0+C2+1 | 2 | 1+C2+0+C2+1 | 2 | 1+C2+0+C2+1 | 3 | 1+C2+0+C2+1 | 4 | 1+C2+0+C2+1 | 4 | 1+C2+0+C2+1 | 4 |
| | | ⅓-⅓-⅓ | 13.398 - 14.683 | 1+C2+0+C2+1 | 2 | 1+C2+0+C2+1 | 2 | 1+C2+0+C2+1 | 3 | 1+C2+0+C2+1 | 4 | 1+C2+0+C2+1 | 4 | 1+C2+0+C2+1 | 4 |
| | 47-3/4" | ¼-½-¼ | 11.391 - 12.297 | 1+C2+1+C2+1 | 2 | 1+C2+1+C2+1 | 2 | 1+C2+1+C2+1 | 3 | 1+C2+1+C2+1 | 4 | 1+C2+1+C2+1 | 4 | 1+C2+1+C2+1 | 4 |
| | | ⅓-⅓-⅓ | 12.298 - 15.558 | 1+C2+0+C2+1 | 2 | 1+C2+0+C2+1 | 2 | 1+C2+0+C2+1 | 3 | 1+C2+0+C2+1 | 4 | 1+C2+0+C2+1 | 4 | 1+C2+0+C2+1 | 4 |
| | 52-1/8" | Custom | 11.391 - 12.016 | 1+C2+1+C2+1 | 2 | 1+C2+1+C2+1 | 2 | 1+C2+1+C2+1 | 3 | 1+C2+1+C2+1 | 4 | 1+C2+1+C2+1 | 4 | 1+C2+1+C2+1 | 4 |
| | | ¼-½-¼ | 12.017 - 13.397 | 1+C2+1+C2+1 | 2 | 1+C2+1+C2+1 | 2 | 1+C2+1+C2+1 | 3 | 1+C2+1+C2+1 | 4 | 1+C2+1+C2+1 | 4 | 1+C2+1+C2+1 | 4 |
| | | ⅓-⅓-⅓ | 13.398 - 17.016 | 1+C2+0+C2+1 | 2 | 1+C2+0+C2+1 | 2 | 1+C2+0+C2+1 | 3 | 1+C2+0+C2+1 | 4 | 1+C2+0+C2+1 | 4 | 1+C2+0+C2+1 | 4 |
| | 60" | Custom | 11.391 - 13.397 | 1+C2+1+C2+1 | 2 | 1+C2+1+C2+1 | 2 | 1+C2+1+C2+1 | 3 | 1+C2+1+C2+1 | 4 | 1+C2+1+C2+1 | 4 | 1+C2+1+C2+1 | 4 |
| | | ¼-½-¼ | 13.398 - 15.360 | 1+C2+1+C2+1 | 2 | 1+C2+1+C2+1 | 2 | 1+C2+1+C2+1 | 3 | 1+C2+1+C2+1 | 4 | 1+C2+1+C2+1 | 4 | 1+C2+1+C2+1 | 4 |
| | | ⅓-⅓-⅓ | 15.361 - 19.641 | 1+C2+0+C2+1 | 2 | 1+C2+0+C2+1 | 2 | 1+C2+0+C2+1 | 3 | 1+C2+0+C2+1 | 4 | 1+C2+0+C2+1 | 4 | 1+C2+0+C2+1 | 4 |
| | 75" | Custom | 11.391 - 13.397 | 1+C2+3+C2+1 | 2 | 1+C2+3+C2+1 | 2 | 1+C2+3+C2+1 | 3 | 1+C2+3+C2+1 | 4 | 1+C2+3+C2+1 | 4 | 1+C2+3+C2+1 | 4 |
| | | ¼-½-¼ | 13.398 - 19.110 | 1+C2+2+C2+1 | 2 | 1+C2+2+C2+1 | 2 | 1+C2+2+C2+1 | 3 | 1+C2+2+C2+1 | 4 | 1+C2+2+C2+1 | 4 | 1+C2+2+C2+1 | 4 |
| | | ⅓-⅓-⅓ | 19.111 - 24.641 | 1+C2+1+C2+1 | 2 | 1+C2+1+C2+1 | 2 | 1+C2+1+C2+1 | 3 | 1+C2+1+C2+1 | 4 | 1+C2+1+C2+1 | 4 | 1+C2+1+C2+1 | 4 |
| | 96" | Custom | 18.360 - 19.397 | 1+C2+3+C2+1 | 2 | 1+C2+3+C2+1 | 2 | 1+C2+3+C2+1 | 3 | 1+C2+3+C2+1 | 4 | 1+C2+3+C2+1 | 4 | 1+C2+3+C2+1 | 4 |
| | | ¼-½-¼ | 19.398 - 24.360 | 1+C2+3+C2+1 | 2 | 1+C2+3+C2+1 | 2 | 1+C2+3+C2+1 | 3 | 1+C2+3+C2+1 | 4 | 1+C2+3+C2+1 | 4 | 1+C2+3+C2+1 | 4 |
| | | Custom | 24.361 - 30.360 | 1+C2+2+C2+1 | 2 | 1+C2+2+C2+1 | 2 | 1+C2+2+C2+1 | 3 | 1+C2+2+C2+1 | 4 | 1+C2+2+C2+1 | 4 | 1+C2+2+C2+1 | 4 |
| | 120" | ¼-½-¼ | ** - 30.360 | 1+C2+3+C2+1 | 2 | 1+C2+3+C2+1 | 2 | 1+C2+3+C2+1 | 3 | 1+C2+3+C2+1 | 4 | 1+C2+3+C2+1 | 4 | 1+C2+3+C2+1 | 4 |

SEE TABLE 9 FOR DESIGN PRESSURE

| Max. Anchor O.C. Spacing for "Integral-Fin" Installation | Anchor Group E | Anchor Group F |
|---|---|---|
| | 2.9" | 4" |

** MIN. SASH SIZE = $\frac{\text{WINDOW WIDTH} - 59.28}{2}$

NOTES:
1) FRAME DIMENSIONS ARE BUCK WIDTH AND BUCK HEIGHT (SEE SHEETS 3-4).
SASH SIZE IS AS PER THE FIGURES ON SHEETS 6-8.
2) FOR SIZES NOT SHOWN, ROUND UP TO THE NEXT AVAILABLE WIDTH OR HEIGHT DIMENSION SHOWN ON THE TABLE.
3) SEE SHEET 9 FOR A GUIDE TO USING THESE TABLES.
4) "1/4-1/2-1/4" AND "1/3-1/3-1/3" INDICATE THAT THOSE STANDARD SASH CONFIGURATIONS FALL WITHIN THE SASH WIDTH RANGE IN THE ADJACENT COLUMN. "CUSTOM" INDICATES THAT NO STANDARD SASH CONFIGURATIONS FALL WITHIN THE RANGE.

**PRODUCT REVISED**
**as complying with the Florida Building Code**
**NOA-No.** 20-0406.01
**Expiration Date** 09/24/2025
**By** CJ
**Miami-Dade Product Control**

Revision:
C) NO CHANGES THIS SHEET.
AK - 03/27/20


PGT®
1070 TECHNOLOGY DRIVE
N. VENICE, FL 34275
(941)-480-1600
REGISTRATION #29296


Date: 05/15/15
Drawn By: J ROSOWSKI
DWG No.: MD-HR5510-01
Rev.: C
Title: ANCHOR QUANTITY TABLES
Desc.: HORIZONTAL ROLLER - LM
Series: HR-5510
Scale: NTS
Sheet: 12 OF 18

ANTHONY LYNN MILLER
LICENSE
No. 58705
STATE OF FLORIDA
PROFESSIONAL ENGINEER
A. LYNN MILLER, P.E.
P.E.# 58705

TABLE 24: MINIMUM ANCHOR QUANTITIES SHOWN. ALL ANCHORAGE MUST ALSO COMPLY WITH THE MAX. O.C. SPACING SHOWN ON THE ELEVATIONS.

| Glass Types 5 & 6 / Reinf. Level R4 | | Sash Configuration | Sash Width Range (in) | Anchor Quantities for XOX Windows | | | | | | | | | | | | | | | | | | | |
|---|---|---|---|---|---|---|---|---|---|---|---|---|---|---|---|---|---|---|---|---|---|---|---|
| | | | | 24" Height | | 30" Height | | 36" Height | | 48" Height | | 54" Height | | 63" Height | | 24" Height | | 30" Height | | 36" Height | | 48" Height | | 54" Height | | 63" Height | |
| | | | | Head & Sill | Jamb | Head & Sill | Jamb | Head & Sill | Jamb | Head & Sill | Jamb | Head & Sill | Jamb | Head & Sill | Jamb | Head & Sill | Jamb | Head & Sill | Jamb | Head & Sill | Jamb | Head & Sill | Jamb | Head & Sill | Jamb | Head & Sill | Jamb |
| | | | | Anchor Group A | | | | | | | | | | | | Anchor Group C | | | | | | | | | | | |
| Window Buck Width | 35-1/4" | ⅓-⅓-⅓ | 11.391 - 11.391 | Not Allowed | | | | | | | | | | | | 1+C2+0+C2+1 | 2 | 1+C2+0+C2+1 | 2 | 1+C2+0+C2+1 | 3 | 1+C2+0+C2+1 | 4 | 1+C2+0+C2+1 | 4 | 1+C2+0+C2+1 | 4 |
| | 38" | ⅓-⅓-⅓ | 12.308 - 12.308 | | | | | | | | | | | | | 1+C2+0+C2+1 | 2 | 1+C2+0+C2+1 | 2 | 1+C2+0+C2+1 | 3 | 1+C2+0+C2+1 | 4 | 1+C2+0+C2+1 | 4 | 1+C2+0+C2+1 | 4 |
| | 45-1/8" | ¼-½-¼ | 11.391 - 13.397 | | | | | | | | | | | | | 1+C2+0+C2+1 | 2 | 1+C2+0+C2+1 | 2 | 1+C2+0+C2+1 | 3 | 1+C2+0+C2+1 | 4 | 1+C2+0+C2+1 | 4 | 1+C2+0+C2+1 | 4 |
| | | ⅓-⅓-⅓ | 13.398 - 14.683 | | | | | | | | | | | | | 1+C2+0+C2+1 | 2 | 1+C2+0+C2+1 | 2 | 1+C2+0+C2+1 | 3 | 1+C2+0+C2+1 | 4 | 1+C2+0+C2+1 | 4 | 1+C2+0+C2+1 | 4 |
| | 47-3/4" | ¼-½-¼ | 11.391 - 12.297 | | | | | | | | | | | | | 1+C2+1+C2+1 | 2 | 1+C2+1+C2+1 | 2 | 1+C2+1+C2+1 | 3 | 1+C2+1+C2+1 | 4 | 1+C2+1+C2+1 | 4 | 1+C2+1+C2+1 | 4 |
| | | ⅓-⅓-⅓ | 12.298 - 15.558 | | | | | | | | | | | | | 1+C2+0+C2+1 | 2 | 1+C2+0+C2+1 | 2 | 1+C2+0+C2+1 | 3 | 1+C2+0+C2+1 | 4 | 1+C2+0+C2+1 | 4 | 1+C2+0+C2+1 | 4 |
| | 52-1/8" | Custom | 11.391 - 12.016 | | | | | | | | | | | | | 1+C2+1+C2+1 | 2 | 1+C2+1+C2+1 | 2 | 1+C2+1+C2+1 | 3 | 1+C2+1+C2+1 | 4 | 1+C2+1+C2+1 | 4 | 1+C2+1+C2+1 | 4 |
| | | ¼-½-¼ | 12.017 - 13.397 | | | | | | | | | | | | | 1+C2+1+C2+1 | 2 | 1+C2+1+C2+1 | 2 | 1+C2+1+C2+1 | 3 | 1+C2+1+C2+1 | 4 | 1+C2+1+C2+1 | 4 | 1+C2+1+C2+1 | 4 |
| | | ⅓-⅓-⅓ | 13.398 - 17.016 | | | | | | | | | | | | | 1+C2+0+C2+1 | 2 | 1+C2+0+C2+1 | 2 | 1+C2+0+C2+1 | 3 | 1+C2+0+C2+1 | 4 | 1+C2+0+C2+1 | 4 | 1+C2+0+C2+1 | 4 |
| | 60" | Custom | 11.391 - 13.397 | | | | | | | | | | | | | 1+C2+1+C2+1 | 2 | 1+C2+1+C2+1 | 2 | 1+C2+1+C2+1 | 3 | 1+C2+1+C2+1 | 4 | 1+C2+1+C2+1 | 4 | 1+C2+1+C2+1 | 4 |
| | | ¼-½-¼ | 13.398 - 15.360 | | | | | | | | | | | | | 1+C2+1+C2+1 | 2 | 1+C2+1+C2+1 | 2 | 1+C2+1+C2+1 | 3 | 1+C2+1+C2+1 | 4 | 1+C2+1+C2+1 | 4 | 1+C2+1+C2+1 | 4 |
| | | ⅓-⅓-⅓ | 15.361 - 19.641 | | | | | | | | | | | | | 1+C2+0+C2+1 | 2 | 1+C2+0+C2+1 | 2 | 1+C2+0+C2+1 | 3 | 1+C2+0+C2+1 | 4 | 1+C2+0+C2+1 | 4 | 1+C2+0+C2+1 | 4 |
| | 75" | Custom | 11.391 - 13.397 | | | | | | | | | | | | | 1+C2+3+C2+1 | 2 | 1+C2+3+C2+1 | 2 | 1+C2+3+C2+1 | 3 | 1+C2+3+C2+1 | 4 | 1+C2+3+C2+1 | 4 | 1+C2+3+C2+1 | 4 |
| | | ¼-½-¼ | 13.398 - 19.110 | | | | | | | | | | | | | 1+C2+2+C2+1 | 2 | 1+C2+2+C2+1 | 2 | 1+C2+2+C2+1 | 3 | 1+C2+2+C2+1 | 4 | 1+C2+2+C2+1 | 4 | 1+C2+2+C2+1 | 4 |
| | | ⅓-⅓-⅓ | 19.111 - 24.641 | | | | | | | | | | | | | 1+C2+1+C2+1 | 2 | 1+C2+1+C2+1 | 2 | 1+C2+1+C2+1 | 3 | 1+C2+1+C2+1 | 4 | 1+C2+1+C2+1 | 4 | 1+C2+1+C2+1 | 4 |
| | 96" | Custom | 18.360 - 19.397 | | | | | | | | | | | | | 1+C2+3+C2+1 | 2 | 1+C2+3+C2+1 | 2 | 1+C2+3+C2+1 | 3 | 1+C2+3+C2+1 | 4 | 1+C2+3+C2+1 | 4 | 1+C2+3+C2+1 | 4 |
| | | ¼-½-¼ | 19.398 - 24.360 | | | | | | | | | | | | | 1+C2+3+C2+1 | 2 | 1+C2+3+C2+1 | 2 | 1+C2+3+C2+1 | 3 | 1+C2+3+C2+1 | 4 | 1+C2+3+C2+1 | 4 | 1+C2+3+C2+1 | 4 |
| | | Custom | 24.361 - 30.360 | | | | | | | | | | | | | 1+C2+2+C2+1 | 2 | 1+C2+2+C2+1 | 2 | 1+C2+2+C2+1 | 3 | 1+C2+2+C2+1 | 4 | 1+C2+2+C2+1 | 4 | 1+C2+2+C2+1 | 4 |
| | 120" | ¼-½-¼ | ** - 30.360 | | | | | | | | | | | | | 1+C2+3+C2+1 | 2 | 1+C2+3+C2+1 | 2 | 1+C2+3+C2+1 | 3 | 1+C2+3+C2+1 | 4 | 1+C2+3+C2+1 | 4 | 1+C2+3+C2+1 | 4 |
| | | | | Anchor Group B | | | | | | | | | | | | Anchor Group D | | | | | | | | | | | |
| Window Buck Width | 35-1/4" | ⅓-⅓-⅓ | 11.391 - 11.391 | 1+C2+0+C2+1 | 2 | 1+C2+0+C2+1 | 2 | 1+C2+0+C2+1 | 3 | 1+C2+0+C2+1 | 4 | 1+C2+0+C2+1 | 4 | 1+C2+0+C2+1 | 4 | 1+C2+0+C2+1 | 2 | 1+C2+0+C2+1 | 2 | 1+C2+0+C2+1 | 3 | 1+C2+0+C2+1 | 4 | 1+C2+0+C2+1 | 4 | 1+C2+0+C2+1 | 4 |
| | 38" | ⅓-⅓-⅓ | 12.308 - 12.308 | 1+C2+0+C2+1 | 2 | 1+C2+0+C2+1 | 2 | 1+C2+0+C2+1 | 3 | 1+C2+0+C2+1 | 4 | 1+C2+0+C2+1 | 4 | 1+C2+0+C2+1 | 4 | 1+C2+0+C2+1 | 2 | 1+C2+0+C2+1 | 2 | 1+C2+0+C2+1 | 3 | 1+C2+0+C2+1 | 4 | 1+C2+0+C2+1 | 4 | 1+C2+0+C2+1 | 4 |
| | 45-1/8" | ¼-½-¼ | 11.391 - 13.397 | 1+C2+0+C2+1 | 2 | 1+C2+0+C2+1 | 2 | 1+C2+0+C2+1 | 3 | 1+C2+0+C2+1 | 4 | 1+C2+0+C2+1 | 4 | 1+C2+0+C2+1 | 4 | 1+C2+0+C2+1 | 2 | 1+C2+0+C2+1 | 2 | 1+C2+0+C2+1 | 3 | 1+C2+0+C2+1 | 4 | 1+C2+0+C2+1 | 4 | 1+C2+0+C2+1 | 4 |
| | | ⅓-⅓-⅓ | 13.398 - 14.683 | 1+C2+0+C2+1 | 2 | 1+C2+0+C2+1 | 2 | 1+C2+0+C2+1 | 3 | 1+C2+0+C2+1 | 4 | 1+C2+0+C2+1 | 4 | 1+C2+0+C2+1 | 4 | 1+C2+0+C2+1 | 2 | 1+C2+0+C2+1 | 2 | 1+C2+0+C2+1 | 3 | 1+C2+0+C2+1 | 4 | 1+C2+0+C2+1 | 4 | 1+C2+0+C2+1 | 4 |
| | 47-3/4" | ¼-½-¼ | 11.391 - 12.297 | 1+C2+1+C2+1 | 2 | 1+C2+1+C2+1 | 2 | 1+C2+1+C2+1 | 3 | 1+C2+1+C2+1 | 4 | 1+C2+1+C2+1 | 4 | 1+C2+1+C2+1 | 4 | 1+C2+1+C2+1 | 2 | 1+C2+1+C2+1 | 2 | 1+C2+1+C2+1 | 3 | 1+C2+1+C2+1 | 4 | 1+C2+1+C2+1 | 4 | 1+C2+1+C2+1 | 4 |
| | | ⅓-⅓-⅓ | 12.298 - 15.558 | 1+C2+0+C2+1 | 2 | 1+C2+0+C2+1 | 2 | 1+C2+0+C2+1 | 3 | 1+C2+0+C2+1 | 4 | 1+C2+0+C2+1 | 4 | 1+C2+0+C2+1 | 4 | 1+C2+0+C2+1 | 2 | 1+C2+0+C2+1 | 2 | 1+C2+0+C2+1 | 3 | 1+C2+0+C2+1 | 4 | 1+C2+0+C2+1 | 4 | 1+C2+0+C2+1 | 4 |
| | 52-1/8" | Custom | 11.391 - 12.016 | 1+C2+1+C2+1 | 2 | 1+C2+1+C2+1 | 2 | 1+C2+1+C2+1 | 3 | 1+C2+1+C2+1 | 4 | 1+C2+1+C2+1 | 4 | 1+C2+1+C2+1 | 4 | 1+C2+1+C2+1 | 2 | 1+C2+1+C2+1 | 2 | 1+C2+1+C2+1 | 3 | 1+C2+1+C2+1 | 4 | 1+C2+1+C2+1 | 4 | 1+C2+1+C2+1 | 4 |
| | | ¼-½-¼ | 12.017 - 13.397 | 1+C2+1+C2+1 | 2 | 1+C2+1+C2+1 | 2 | 1+C2+1+C2+1 | 3 | 1+C2+1+C2+1 | 4 | 1+C2+1+C2+1 | 4 | 1+C2+1+C2+1 | 4 | 1+C2+1+C2+1 | 2 | 1+C2+1+C2+1 | 2 | 1+C2+1+C2+1 | 3 | 1+C2+1+C2+1 | 4 | 1+C2+1+C2+1 | 4 | 1+C2+1+C2+1 | 4 |
| | | ⅓-⅓-⅓ | 13.398 - 17.016 | 1+C2+0+C2+1 | 2 | 1+C2+0+C2+1 | 2 | 1+C2+0+C2+1 | 3 | 1+C2+0+C2+1 | 4 | 1+C2+0+C2+1 | 4 | 1+C2+0+C2+1 | 4 | 1+C2+0+C2+1 | 2 | 1+C2+0+C2+1 | 2 | 1+C2+0+C2+1 | 3 | 1+C2+0+C2+1 | 4 | 1+C2+0+C2+1 | 4 | 1+C2+0+C2+1 | 4 |
| | 60" | Custom | 11.391 - 13.397 | 1+C2+1+C2+1 | 2 | 1+C2+1+C2+1 | 2 | 1+C2+1+C2+1 | 3 | 1+C2+1+C2+1 | 4 | 1+C2+1+C2+1 | 4 | 1+C2+1+C2+1 | 4 | 1+C2+1+C2+1 | 2 | 1+C2+1+C2+1 | 2 | 1+C2+1+C2+1 | 3 | 1+C2+1+C2+1 | 4 | 1+C2+1+C2+1 | 4 | 1+C2+1+C2+1 | 4 |
| | | ¼-½-¼ | 13.398 - 15.360 | 1+C2+1+C2+1 | 2 | 1+C2+1+C2+1 | 2 | 1+C2+1+C2+1 | 3 | 1+C2+1+C2+1 | 4 | 1+C2+1+C2+1 | 4 | 1+C2+1+C2+1 | 4 | 1+C2+1+C2+1 | 2 | 1+C2+1+C2+1 | 2 | 1+C2+1+C2+1 | 3 | 1+C2+1+C2+1 | 4 | 1+C2+1+C2+1 | 4 | 1+C2+1+C2+1 | 4 |
| | | ⅓-⅓-⅓ | 15.361 - 19.641 | 1+C2+0+C2+1 | 2 | 1+C2+0+C2+1 | 2 | 1+C2+0+C2+1 | 3 | 1+C2+0+C2+1 | 4 | 1+C2+0+C2+1 | 4 | 1+C3+0+C3+1 | 4 | 1+C2+0+C2+1 | 2 | 1+C2+0+C2+1 | 2 | 1+C2+0+C2+1 | 3 | 1+C2+0+C2+1 | 4 | 1+C2+0+C2+1 | 4 | 1+C2+0+C2+1 | 4 |
| | 75" | Custom | 11.391 - 13.397 | 1+C2+3+C2+1 | 2 | 1+C2+3+C2+1 | 2 | 1+C2+3+C2+1 | 3 | 1+C2+3+C2+1 | 4 | 1+C2+3+C2+1 | 4 | 1+C2+3+C2+1 | 4 | 1+C2+3+C2+1 | 2 | 1+C2+3+C2+1 | 2 | 1+C2+3+C2+1 | 3 | 1+C2+3+C2+1 | 4 | 1+C2+3+C2+1 | 4 | 1+C2+3+C2+1 | 4 |
| | | ¼-½-¼ | 13.398 - 19.110 | 1+C2+2+C2+1 | 2 | 1+C2+2+C2+1 | 2 | 1+C2+2+C2+1 | 3 | 1+C2+2+C2+1 | 4 | 1+C2+2+C2+1 | 4 | 1+C2+2+C2+1 | 4 | 1+C2+2+C2+1 | 2 | 1+C2+2+C2+1 | 2 | 1+C2+2+C2+1 | 3 | 1+C2+2+C2+1 | 4 | 1+C2+2+C2+1 | 4 | 1+C2+2+C2+1 | 4 |
| | | ⅓-⅓-⅓ | 19.111 - 24.641 | 1+C2+1+C2+1 | 2 | 1+C2+1+C2+1 | 2 | 1+C2+1+C2+1 | 3 | 1+C2+1+C2+1 | 4 | 1+C2+1+C2+1 | 4 | 1+C2+1+C2+1 | 4 | 1+C2+1+C2+1 | 2 | 1+C2+1+C2+1 | 2 | 1+C2+1+C2+1 | 3 | 1+C2+1+C2+1 | 4 | 1+C2+1+C2+1 | 4 | 1+C2+1+C2+1 | 4 |
| | 96" | Custom | 18.360 - 19.397 | 1+C2+3+C2+1 | 2 | 1+C2+3+C2+1 | 2 | 1+C2+3+C2+1 | 3 | 1+C2+3+C2+1 | 4 | 1+C2+3+C2+1 | 4 | 1+C2+3+C2+1 | 4 | 1+C2+3+C2+1 | 2 | 1+C2+3+C2+1 | 2 | 1+C2+3+C2+1 | 3 | 1+C2+3+C2+1 | 4 | 1+C2+3+C2+1 | 4 | 1+C2+3+C2+1 | 4 |
| | | ¼-½-¼ | 19.398 - 24.360 | 1+C2+3+C2+1 | 2 | 1+C2+3+C2+1 | 2 | 1+C2+3+C2+1 | 3 | 1+C2+3+C2+1 | 4 | 1+C2+3+C2+1 | 4 | 1+C2+3+C2+1 | 4 | 1+C2+3+C2+1 | 2 | 1+C2+3+C2+1 | 2 | 1+C2+3+C2+1 | 3 | 1+C2+3+C2+1 | 4 | 1+C2+3+C2+1 | 4 | 1+C2+3+C2+1 | 4 |
| | | Custom | 24.361 - 30.360 | 1+C2+2+C2+1 | 2 | 1+C2+2+C2+1 | 2 | 1+C2+2+C2+1 | 3 | 1+C2+2+C2+1 | 4 | 1+C2+2+C2+1 | 4 | 1+C2+2+C2+1 | 4 | 1+C2+2+C2+1 | 2 | 1+C2+2+C2+1 | 2 | 1+C2+2+C2+1 | 3 | 1+C2+2+C2+1 | 4 | 1+C2+2+C2+1 | 4 | 1+C2+2+C2+1 | 4 |
| | 120" | ¼-½-¼ | ** - 30.360 | 1+C2+3+C2+1 | 2 | 1+C2+3+C2+1 | 2 | 1+C2+3+C2+1 | 3 | 1+C2+3+C2+1 | 4 | 1+C2+3+C2+1 | 4 | 1+C2+3+C2+1 | 4 | 1+C2+3+C2+1 | 2 | 1+C2+3+C2+1 | 2 | 1+C2+3+C2+1 | 3 | 1+C2+3+C2+1 | 4 | 1+C2+3+C2+1 | 4 | 1+C2+3+C2+1 | 4 |

SEE TABLE 13 FOR DESIGN PRESSURE

| Max. Anchor O.C. Spacing for "Integral-Fin" Installation | Anchor Group F |
|---|---|
| | 4" |

** MIN. SASH SIZE = $\frac{\text{WINDOW WIDTH - 59.28}}{2}$

NOTES:
1) FRAME DIMENSIONS ARE BUCK WIDTH AND BUCK HEIGHT (SEE SHEETS 3-4).
SASH SIZE IS AS PER THE FIGURES ON SHEETS 6-8.
2) FOR SIZES NOT SHOWN, ROUND UP TO THE NEXT AVAILABLE WIDTH OR HEIGHT DIMENSION SHOWN ON THE TABLE.
3) SEE SHEET 9 FOR A GUIDE TO USING THESE TABLES.
4) "1/4-1/2-1/4" AND "1/3-1/3-1/3" INDICATE THAT THOSE STANDARD SASH CONFIGURATIONS FALL WITHIN THE SASH WIDTH RANGE IN THE ADJACENT COLUMN. "CUSTOM" INDICATES THAT NO STANDARD SASH CONFIGURATIONS FALL WITHIN THE RANGE.

**PRODUCT REVISED**
**as complying with the Florida Building Code**
**NOA-No.** 20-0406.01
**Expiration Date** 09/24/2025
**By**
**Miami-Dade Product Control**

Revision: C) NO CHANGES THIS SHEET. AK - 03/27/20

1070 TECHNOLOGY DRIVE
N. VENICE, FL 34275
(941)-480-1600
REGISTRATION #29296

| Series | Desc. / Title | Sheet | Scale | DWG No. | Drawn By | Date | Rev. |
|---|---|---|---|---|---|---|---|
| HR-5510 | ANCHOR QUANTITY TABLES | 13 OF 18 | NTS | MD-HR5510-01 | J ROSOWSKI | 05/15/15 | C |

HORIZONTAL ROLLER - LM

ANTHONY LYNN MILLER LICENSE No. 58705 STATE OF FLORIDA PROFESSIONAL ENGINEER
6-24-20

A. LYNN MILLER, P.E.
P.E.# 58705

TABLE 25: MINIMUM ANCHOR QUANTITIES SHOWN. ALL ANCHORAGE MUST ALSO COMPLY WITH THE MAX. O.C. SPACING SHOWN ON THE ELEVATIONS.

## Anchor Quantities for XOX Windows

| Glass Types 7 & 8 / Reinf. Level R4 | | Sash Configuration | Sash Width Range (in) | 24" Height | | 30" Height | | 36" Height | | 48" Height | | 54" Height | | 63" Height | |
|---|---|---|---|---|---|---|---|---|---|---|---|---|---|---|---|
| | | | | Head & Sill | Jamb | Head & Sill | Jamb | Head & Sill | Jamb | Head & Sill | Jamb | Head & Sill | Jamb | Head & Sill | Jamb |
| | | | | **Anchor Group A** | | | | | | | | | | | |
| Window Buck Width | 35-1/4" | ⅓-⅓-⅓ | 11.391 - 11.391 | Not Allowed | | | | | | | | | | | |
| | 38" | ⅓-⅓-⅓ | 12.308 - 12.308 | | | | | | | | | | | | |
| | 45-1/8" | ¼-½-¼ | 11.391 - 13.397 | | | | | | | | | | | | |
| | | ⅓-⅓-⅓ | 13.398 - 14.683 | | | | | | | | | | | | |
| | 47-3/4" | ¼-½-¼ | 11.391 - 12.297 | | | | | | | | | | | | |
| | | ⅓-⅓-⅓ | 12.298 - 15.558 | | | | | | | | | | | | |
| | 52-1/8" | Custom | 11.391 - 12.016 | | | | | | | | | | | | |
| | | ¼-½-¼ | 12.017 - 13.397 | | | | | | | | | | | | |
| | | ⅓-⅓-⅓ | 13.398 - 17.016 | | | | | | | | | | | | |
| | 60" | Custom | 11.391 - 13.397 | | | | | | | | | | | | |
| | | ¼-½-¼ | 13.398 - 15.360 | | | | | | | | | | | | |
| | | ⅓-⅓-⅓ | 15.361 - 19.641 | | | | | | | | | | | | |
| | 75" | Custom | 11.391 - 13.397 | | | | | | | | | | | | |
| | | ¼-½-¼ | 13.398 - 19.110 | | | | | | | | | | | | |
| | | ⅓-⅓-⅓ | 19.111 - 24.641 | | | | | | | | | | | | |
| | 96" | Custom | 18.360 - 19.397 | | | | | | | | | | | | |
| | | ¼-½-¼ | 19.398 - 24.360 | | | | | | | | | | | | |
| | | Custom | 24.361 - 30.360 | | | | | | | | | | | | |
| | 120" | ¼-½-¼ | ** - 30.360 | | | | | | | | | | | | |
| | | | | **Anchor Group B** | | | | | | | | | | | |
| Window Buck Width | 35-1/4" | ⅓-⅓-⅓ | 11.391 - 11.391 | 1+C2+0+C2+1 | 2 | 1+C2+0+C2+1 | 2 | 1+C2+0+C2+1 | 3 | 1+C2+0+C2+1 | 4 | 1+C2+0+C2+1 | 4 | 1+C2+0+C2+1 | 4 |
| | 38" | ⅓-⅓-⅓ | 12.308 - 12.308 | 1+C2+0+C2+1 | 2 | 1+C2+0+C2+1 | 2 | 1+C2+0+C2+1 | 3 | 1+C2+0+C2+1 | 4 | 1+C2+0+C2+1 | 4 | 1+C2+0+C2+1 | 4 |
| | 45-1/8" | ¼-½-¼ | 11.391 - 13.397 | 1+C2+0+C2+1 | 2 | 1+C2+0+C2+1 | 2 | 1+C2+0+C2+1 | 3 | 1+C2+0+C2+1 | 4 | 1+C2+0+C2+1 | 4 | 1+C2+0+C2+1 | 4 |
| | | ⅓-⅓-⅓ | 13.398 - 14.683 | 1+C2+0+C2+1 | 2 | 1+C2+0+C2+1 | 2 | 1+C2+0+C2+1 | 3 | 1+C2+0+C2+1 | 4 | 1+C2+0+C2+1 | 4 | 1+C2+0+C2+1 | 4 |
| | 47-3/4" | ¼-½-¼ | 11.391 - 12.297 | 1+C2+1+C2+1 | 2 | 1+C2+1+C2+1 | 2 | 1+C2+1+C2+1 | 3 | 1+C2+1+C2+1 | 4 | 1+C2+1+C2+1 | 4 | 1+C2+1+C2+1 | 4 |
| | | ⅓-⅓-⅓ | 12.298 - 15.558 | 1+C2+0+C2+1 | 2 | 1+C2+0+C2+1 | 2 | 1+C2+0+C2+1 | 3 | 1+C2+0+C2+1 | 4 | 1+C2+0+C2+1 | 4 | 1+C2+0+C2+1 | 4 |
| | 52-1/8" | Custom | 11.391 - 12.016 | 1+C2+1+C2+1 | 2 | 1+C2+1+C2+1 | 2 | 1+C2+1+C2+1 | 3 | 1+C2+1+C2+1 | 4 | 1+C2+1+C2+1 | 4 | 1+C2+1+C2+1 | 4 |
| | | ¼-½-¼ | 12.017 - 13.397 | 1+C2+1+C2+1 | 2 | 1+C2+1+C2+1 | 2 | 1+C2+1+C2+1 | 3 | 1+C2+1+C2+1 | 4 | 1+C2+1+C2+1 | 4 | 1+C2+1+C2+1 | 4 |
| | | ⅓-⅓-⅓ | 13.398 - 17.016 | 1+C2+0+C2+1 | 2 | 1+C2+0+C2+1 | 2 | 1+C2+0+C2+1 | 3 | 1+C2+0+C2+1 | 4 | 1+C2+0+C2+1 | 4 | 1+C2+0+C2+1 | 4 |
| | 60" | Custom | 11.391 - 13.397 | 1+C2+1+C2+1 | 2 | 1+C2+1+C2+1 | 2 | 1+C2+1+C2+1 | 3 | 1+C2+1+C2+1 | 4 | 1+C2+1+C2+1 | 4 | 1+C2+1+C2+1 | 4 |
| | | ¼-½-¼ | 13.398 - 15.360 | 1+C2+1+C2+1 | 2 | 1+C2+1+C2+1 | 2 | 1+C2+1+C2+1 | 3 | 1+C2+1+C2+1 | 4 | 1+C2+1+C2+1 | 4 | 1+C2+1+C2+1 | 4 |
| | | ⅓-⅓-⅓ | 15.361 - 19.641 | 1+C2+0+C2+1 | 2 | 1+C2+0+C2+1 | 2 | 1+C2+0+C2+1 | 3 | 1+C2+0+C2+1 | 4 | 1+C3+0+C3+1 | 4 | 1+C2+0+C2+1 | 4 |
| | 75" | Custom | 11.391 - 13.397 | 1+C2+3+C2+1 | 2 | 1+C2+3+C2+1 | 2 | 1+C2+3+C2+1 | 3 | 1+C2+3+C2+1 | 4 | 1+C2+3+C2+1 | 4 | 1+C2+3+C2+1 | 4 |
| | | ¼-½-¼ | 13.398 - 19.110 | 1+C2+2+C2+1 | 2 | 1+C2+2+C2+1 | 2 | 1+C2+2+C2+1 | 3 | 1+C2+2+C2+1 | 4 | 1+C3+2+C3+1 | 4 | 1+C2+2+C2+1 | 4 |
| | | ⅓-⅓-⅓ | 19.111 - 24.641 | 1+C2+1+C2+1 | 2 | 1+C2+1+C2+1 | 2 | 1+C2+1+C2+1 | 3 | 1+C2+1+C2+1 | 4 | 1+C3+1+C3+1 | 4 | 1+C2+1+C2+1 | 4 |
| | 96" | Custom | 18.360 - 19.397 | 1+C2+3+C2+1 | 2 | 1+C2+3+C2+1 | 2 | 1+C2+3+C2+1 | 3 | 1+C2+3+C2+1 | 4 | 1+C2+3+C2+1 | 4 | 1+C3+3+C3+1 | 4 |
| | | ¼-½-¼ | 19.398 - 24.360 | 1+C2+3+C2+1 | 2 | 1+C2+3+C2+1 | 2 | 1+C2+3+C2+1 | 3 | 1+C2+3+C2+1 | 4 | 1+C2+3+C2+1 | 4 | 1+C3+3+C3+1 | 4 |
| | | Custom | 24.361 - 30.360 | 1+C2+2+C2+1 | 2 | 1+C2+2+C2+1 | 2 | 1+C2+2+C2+1 | 3 | 1+C2+2+C2+1 | 4 | 1+C2+2+C2+1 | 4 | 1+C3+2+C3+1 | 4 |
| | 120" | ¼-½-¼ | ** - 30.360 | 1+C2+3+C2+1 | 2 | 1+C2+3+C2+1 | 2 | 1+C2+3+C2+1 | 3 | 1+C2+3+C2+1 | 4 | 1+C2+3+C2+1 | 4 | 1+C3+3+C3+1 | 4 |

| 24" Height | | 30" Height | | 36" Height | | 48" Height | | 54" Height | | 63" Height | |
|---|---|---|---|---|---|---|---|---|---|---|---|
| Head & Sill | Jamb | Head & Sill | Jamb | Head & Sill | Jamb | Head & Sill | Jamb | Head & Sill | Jamb | Head & Sill | Jamb |
| **Anchor Group C** | | | | | | | | | | | |
| 1+C2+0+C2+1 | 2 | 1+C2+0+C2+1 | 2 | 1+C2+0+C2+1 | 3 | 1+C2+0+C2+1 | 4 | 1+C2+0+C2+1 | 4 | 1+C2+0+C2+1 | 4 |
| 1+C2+0+C2+1 | 2 | 1+C2+0+C2+1 | 2 | 1+C2+0+C2+1 | 3 | 1+C2+0+C2+1 | 4 | 1+C2+0+C2+1 | 4 | 1+C2+0+C2+1 | 4 |
| 1+C2+0+C2+1 | 2 | 1+C2+0+C2+1 | 2 | 1+C2+0+C2+1 | 3 | 1+C2+0+C2+1 | 4 | 1+C2+0+C2+1 | 4 | 1+C2+0+C2+1 | 4 |
| 1+C2+0+C2+1 | 2 | 1+C2+0+C2+1 | 2 | 1+C2+0+C2+1 | 3 | 1+C2+0+C2+1 | 4 | 1+C2+0+C2+1 | 4 | 1+C2+0+C2+1 | 4 |
| 1+C2+1+C2+1 | 2 | 1+C2+1+C2+1 | 2 | 1+C2+1+C2+1 | 3 | 1+C2+1+C2+1 | 4 | 1+C2+1+C2+1 | 4 | 1+C2+1+C2+1 | 4 |
| 1+C2+0+C2+1 | 2 | 1+C2+0+C2+1 | 2 | 1+C2+0+C2+1 | 3 | 1+C2+0+C2+1 | 4 | 1+C2+0+C2+1 | 4 | 1+C2+0+C2+1 | 4 |
| 1+C2+1+C2+1 | 2 | 1+C2+1+C2+1 | 2 | 1+C2+1+C2+1 | 3 | 1+C2+1+C2+1 | 4 | 1+C2+1+C2+1 | 4 | 1+C2+1+C2+1 | 4 |
| 1+C2+1+C2+1 | 2 | 1+C2+1+C2+1 | 2 | 1+C2+1+C2+1 | 3 | 1+C2+1+C2+1 | 4 | 1+C2+1+C2+1 | 4 | 1+C2+1+C2+1 | 4 |
| 1+C2+0+C2+1 | 2 | 1+C2+0+C2+1 | 2 | 1+C2+0+C2+1 | 3 | 1+C2+0+C2+1 | 4 | 1+C2+0+C2+1 | 4 | 1+C2+0+C2+1 | 4 |
| 1+C2+1+C2+1 | 2 | 1+C2+1+C2+1 | 2 | 1+C2+1+C2+1 | 3 | 1+C2+1+C2+1 | 4 | 1+C2+1+C2+1 | 4 | 1+C2+1+C2+1 | 4 |
| 1+C2+1+C2+1 | 2 | 1+C2+1+C2+1 | 2 | 1+C2+1+C2+1 | 3 | 1+C2+1+C2+1 | 4 | 1+C2+1+C2+1 | 4 | 1+C2+1+C2+1 | 4 |
| 1+C2+0+C2+1 | 2 | 1+C2+0+C2+1 | 2 | 1+C2+0+C2+1 | 3 | 1+C2+0+C2+1 | 4 | 1+C2+0+C2+1 | 4 | 1+C2+0+C2+1 | 4 |
| 1+C2+3+C2+1 | 2 | 1+C2+3+C2+1 | 2 | 1+C2+3+C2+1 | 3 | 1+C2+3+C2+1 | 4 | 1+C2+3+C2+1 | 4 | 1+C2+3+C2+1 | 4 |
| 1+C2+2+C2+1 | 2 | 1+C2+2+C2+1 | 2 | 1+C2+2+C2+1 | 3 | 1+C2+2+C2+1 | 4 | 1+C2+2+C2+1 | 4 | 1+C2+1+C2+1 | 4 |
| 1+C2+1+C2+1 | 2 | 1+C2+1+C2+1 | 2 | 1+C2+1+C2+1 | 3 | 1+C2+1+C2+1 | 4 | 1+C2+1+C2+1 | 4 | 1+C2+1+C2+1 | 4 |
| 1+C2+3+C2+1 | 2 | 1+C2+3+C2+1 | 2 | 1+C2+3+C2+1 | 3 | 1+C2+3+C2+1 | 4 | 1+C2+3+C2+1 | 4 | 1+C2+3+C2+1 | 4 |
| 1+C2+3+C2+1 | 2 | 1+C2+3+C2+1 | 2 | 1+C2+3+C2+1 | 3 | 1+C2+3+C2+1 | 4 | 1+C2+3+C2+1 | 4 | 1+C3+3+C3+1 | 4 |
| 1+C2+2+C2+1 | 2 | 1+C2+2+C2+1 | 2 | 1+C2+2+C2+1 | 3 | 1+C2+2+C2+1 | 4 | 1+C2+2+C2+1 | 4 | 1+C3+2+C3+1 | 4 |
| 1+C2+3+C2+1 | 2 | 1+C2+3+C2+1 | 2 | 1+C2+3+C2+1 | 3 | 1+C2+3+C2+1 | 4 | 1+C2+3+C2+1 | 4 | 1+C3+3+C3+1 | 4 |
| **Anchor Group D** | | | | | | | | | | | |
| 1+C2+0+C2+1 | 2 | 1+C2+0+C2+1 | 2 | 1+C2+0+C2+1 | 3 | 1+C2+0+C2+1 | 4 | 1+C2+0+C2+1 | 4 | 1+C2+0+C2+1 | 4 |
| 1+C2+0+C2+1 | 2 | 1+C2+0+C2+1 | 2 | 1+C2+0+C2+1 | 3 | 1+C2+0+C2+1 | 4 | 1+C2+0+C2+1 | 4 | 1+C2+0+C2+1 | 4 |
| 1+C2+0+C2+1 | 2 | 1+C2+0+C2+1 | 2 | 1+C2+0+C2+1 | 3 | 1+C2+0+C2+1 | 4 | 1+C2+0+C2+1 | 4 | 1+C2+0+C2+1 | 4 |
| 1+C2+0+C2+1 | 2 | 1+C2+0+C2+1 | 2 | 1+C2+0+C2+1 | 3 | 1+C2+0+C2+1 | 4 | 1+C2+0+C2+1 | 4 | 1+C2+0+C2+1 | 4 |
| 1+C2+1+C2+1 | 2 | 1+C2+1+C2+1 | 2 | 1+C2+1+C2+1 | 3 | 1+C2+1+C2+1 | 4 | 1+C2+1+C2+1 | 4 | 1+C2+1+C2+1 | 4 |
| 1+C2+0+C2+1 | 2 | 1+C2+0+C2+1 | 2 | 1+C2+0+C2+1 | 3 | 1+C2+0+C2+1 | 4 | 1+C2+0+C2+1 | 4 | 1+C2+0+C2+1 | 4 |
| 1+C2+1+C2+1 | 2 | 1+C2+1+C2+1 | 2 | 1+C2+1+C2+1 | 3 | 1+C2+1+C2+1 | 4 | 1+C2+1+C2+1 | 4 | 1+C2+1+C2+1 | 4 |
| 1+C2+1+C2+1 | 2 | 1+C2+1+C2+1 | 2 | 1+C2+1+C2+1 | 3 | 1+C2+1+C2+1 | 4 | 1+C2+1+C2+1 | 4 | 1+C2+1+C2+1 | 4 |
| 1+C2+0+C2+1 | 2 | 1+C2+0+C2+1 | 2 | 1+C2+0+C2+1 | 3 | 1+C2+0+C2+1 | 4 | 1+C2+0+C2+1 | 4 | 1+C2+0+C2+1 | 4 |
| 1+C2+3+C2+1 | 2 | 1+C2+3+C2+1 | 2 | 1+C2+3+C2+1 | 3 | 1+C2+3+C2+1 | 4 | 1+C2+3+C2+1 | 4 | 1+C2+3+C2+1 | 4 |
| 1+C2+2+C2+1 | 2 | 1+C2+2+C2+1 | 2 | 1+C2+2+C2+1 | 3 | 1+C2+2+C2+1 | 4 | 1+C2+2+C2+1 | 4 | 1+C2+1+C2+1 | 4 |
| 1+C2+1+C2+1 | 2 | 1+C2+1+C2+1 | 2 | 1+C2+1+C2+1 | 3 | 1+C2+1+C2+1 | 4 | 1+C2+1+C2+1 | 4 | 1+C2+1+C2+1 | 4 |
| 1+C2+3+C2+1 | 2 | 1+C2+3+C2+1 | 2 | 1+C2+3+C2+1 | 3 | 1+C2+3+C2+1 | 4 | 1+C2+3+C2+1 | 4 | 1+C2+3+C2+1 | 4 |
| 1+C2+3+C2+1 | 2 | 1+C2+3+C2+1 | 2 | 1+C2+3+C2+1 | 3 | 1+C2+3+C2+1 | 4 | 1+C2+3+C2+1 | 4 | 1+C3+3+C3+1 | 4 |
| 1+C2+2+C2+1 | 2 | 1+C2+2+C2+1 | 2 | 1+C2+2+C2+1 | 3 | 1+C2+2+C2+1 | 4 | 1+C2+2+C2+1 | 4 | 1+C3+2+C3+1 | 4 |
| 1+C2+3+C2+1 | 2 | 1+C2+3+C2+1 | 2 | 1+C2+3+C2+1 | 3 | 1+C2+3+C2+1 | 4 | 1+C2+3+C2+1 | 4 | 1+C3+3+C3+1 | 4 |

SEE TABLE 14 FOR DESIGN PRESSURE

| Max. Anchor O.C. Spacing for "Integral-Fin" Installation | Anchor Group F |
|---|---|
| | 3.7" |

** MIN. SASH SIZE = $\frac{\text{WINDOW WIDTH - 59.28}}{2}$

NOTES:
1) FRAME DIMENSIONS ARE BUCK WIDTH AND BUCK HEIGHT (SEE SHEETS 3-4). SASH SIZE IS AS PER THE FIGURES ON SHEETS 6-8.
2) FOR SIZES NOT SHOWN, ROUND UP TO THE NEXT AVAILABLE WIDTH OR HEIGHT DIMENSION SHOWN ON THE TABLE.
3) SEE SHEET 9 FOR A GUIDE TO USING THESE TABLES.
4) "1/4-1/2-1/4" AND "1/3-1/3-1/3" INDICATE THAT THOSE STANDARD SASH CONFIGURATIONS FALL WITHIN THE SASH WIDTH RANGE IN THE ADJACENT COLUMN. "CUSTOM" INDICATES THAT NO STANDARD SASH CONFIGURATIONS FALL WITHIN THE RANGE.

**PRODUCT REVISED**
**as complying with the Florida Building Code**
**NOA-No.** 20-0406.01
**Expiration Date** 09/24/2025
**By**
**Miami-Dade Product Control**

Revision: C) NO CHANGES THIS SHEET. AK - 03/27/20


PGT®
REGISTRATION #29296
1070 TECHNOLOGY DRIVE
N. VENICE, FL 34275
(941)-480-1600


| Series | Title | Date | Rev. |
|---|---|---|---|
| MD-HR5510-01 | ANCHOR QUANTITY TABLES | 05/15/15 | C |
| DWG No. | Desc. | Drawn By | |
| MD-HR5510-01 | HORIZONTAL ROLLER - LM | J ROSOWSKI | |
| Sheet | Scale | | |
| 14 OF 18 | NTS | | |

ANTHONY LYNN MILLER LICENSE No. 58705 STATE OF FLORIDA PROFESSIONAL ENGINEER
4/22/20
A. LYNN MILLER, P.E.
P.E.# 58705

TABLE 26: MINIMUM ANCHOR QUANTITIES SHOWN. ALL ANCHORAGE MUST ALSO COMPLY WITH THE MAX. O.C. SPACING SHOWN ON THE ELEVATIONS.

## Anchor Quantities for XOX Windows

| Glass Types 10 - 12 / Reinf. Level R4 | | Sash Configuration | Sash Width Range (in) | 24" Height | | 30" Height | | 36" Height | | 48" Height | | 54" Height | | 63" Height | |
|---|---|---|---|---|---|---|---|---|---|---|---|---|---|---|---|
| | | | | Head & Sill | Jamb | Head & Sill | Jamb | Head & Sill | Jamb | Head & Sill | Jamb | Head & Sill | Jamb | Head & Sill | Jamb |
| Window Buck Width | 35-1/4" | ⅓-⅓-⅓ | 11.391 - 11.391 | Not Allowed | | | | | | | | | | | |
| | 38" | ⅓-⅓-⅓ | 12.308 - 12.308 | | | | | | | | | | | | |
| | 45-1/8" | ¼-½-¼ | 11.391 - 13.397 | | | | | | | | | | | | |
| | | ⅓-⅓-⅓ | 13.398 - 14.683 | | | | | | | | | | | | |
| | 47-3/4" | ¼-½-¼ | 11.391 - 12.297 | | | | | | | | | | | | |
| | | ⅓-⅓-⅓ | 12.298 - 15.558 | | | | | | | | | | | | |
| | 52-1/8" | Custom | 11.391 - 12.016 | | | | | | | | | | | | |
| | | ¼-½-¼ | 12.017 - 13.397 | | | | | | | | | | | | |
| | | ⅓-⅓-⅓ | 13.398 - 17.016 | | | | | | | | | | | | |
| | 60" | Custom | 11.391 - 13.397 | | | | | | | | | | | | |
| | | ¼-½-¼ | 13.398 - 15.360 | | | | | | | | | | | | |
| | | ⅓-⅓-⅓ | 15.361 - 19.641 | | | | | | | | | | | | |
| | 75" | Custom | 11.391 - 13.397 | | | | | | | | | | | | |
| | | ¼-½-¼ | 13.398 - 19.110 | | | | | | | | | | | | |
| | | ⅓-⅓-⅓ | 19.111 - 24.641 | | | | | | | | | | | | |
| | 96" | Custom | 17.641 - 19.397 | | | | | | | | | | | | |
| | | ¼-½-¼ | 19.398 - 24.360 | | | | | | | | | | | | |
| | | ⅓-⅓-⅓ | 24.361 - 31.641 | | | | | | | | | | | | |
| | 120" | ¼-½-¼ | 29.641 - 32.515 | | | | | | | | | | | | |
| | | ⅓-⅓-⅓ | 32.516 - 39.641 | | | | | | | | | | | | |
| | 140" | Custom | ** - 39.641 | | | | | | | | | | | | |

**Anchor Group A**

Not Allowed

**Anchor Group B**

| Window Buck Width | | | | 24" Height | | 30" Height | | 36" Height | | 48" Height | | 54" Height | | 63" Height | |
|---|---|---|---|---|---|---|---|---|---|---|---|---|---|---|---|
| | | | | Head & Sill | Jamb | Head & Sill | Jamb | Head & Sill | Jamb | Head & Sill | Jamb | Head & Sill | Jamb | Head & Sill | Jamb |
| | 35-1/4" | ⅓-⅓-⅓ | 11.391 - 11.391 | 1+C2+0+C2+1 | 2 | 1+C2+0+C2+1 | 2 | 1+C2+0+C2+1 | 3 | 1+C2+0+C2+1 | 4 | 1+C2+0+C2+1 | 4 | 1+C2+0+C2+1 | 4 |
| | 38" | ⅓-⅓-⅓ | 12.308 - 12.308 | 1+C2+0+C2+1 | 2 | 1+C2+0+C2+1 | 2 | 1+C2+0+C2+1 | 3 | 1+C2+0+C2+1 | 4 | 1+C2+0+C2+1 | 4 | 1+C2+0+C2+1 | 4 |
| | 45-1/8" | ¼-½-¼ | 11.391 - 13.397 | 1+C2+0+C2+1 | 2 | 1+C2+0+C2+1 | 2 | 1+C2+0+C2+1 | 3 | 1+C2+0+C2+1 | 4 | 1+C3+0+C3+1 | 4 | 1+C3+0+C3+1 | 4 |
| | | ⅓-⅓-⅓ | 13.398 - 14.683 | 1+C2+0+C2+1 | 2 | 1+C2+0+C2+1 | 2 | 1+C2+0+C2+1 | 3 | 1+C2+0+C2+1 | 4 | 1+C2+0+C2+1 | 4 | 1+C3+0+C3+1 | 4 |
| | 47-3/4" | ¼-½-¼ | 11.391 - 12.297 | 1+C2+0+C2+1 | 2 | 1+C2+0+C2+1 | 2 | 1+C2+0+C2+1 | 3 | 1+C2+0+C2+1 | 4 | 1+C3+0+C3+1 | 4 | 1+C3+0+C3+1 | 4 |
| | | ⅓-⅓-⅓ | 12.298 - 15.558 | 1+C2+0+C2+1 | 2 | 1+C2+0+C2+1 | 2 | 1+C2+0+C2+1 | 3 | 1+C2+0+C2+1 | 4 | 1+C3+0+C3+1 | 4 | 1+C3+0+C3+1 | 4 |
| | 52-1/8" | Custom | 11.391 - 12.016 | 1+C2+0+C2+1 | 2 | 1+C2+0+C2+1 | 2 | 1+C2+0+C2+1 | 3 | 1+C3+0+C3+1 | 4 | 1+C3+0+C3+1 | 4 | 1+C3+0+C3+1 | 4 |
| | | ¼-½-¼ | 12.017 - 13.397 | 1+C2+0+C2+1 | 2 | 1+C2+0+C2+1 | 2 | 1+C2+0+C2+1 | 3 | 1+C3+0+C3+1 | 4 | 1+C3+0+C3+1 | 4 | 1+C3+0+C3+1 | 4 |
| | | ⅓-⅓-⅓ | 13.398 - 17.016 | 1+C2+0+C2+1 | 2 | 1+C2+0+C2+1 | 2 | 1+C2+0+C2+1 | 3 | 1+C3+0+C3+1 | 4 | 1+C3+0+C3+1 | 4 | 1+C3+0+C3+1 | 4 |
| | 60" | Custom | 11.391 - 13.397 | 1+C2+2+C2+1 | 2 | 1+C2+2+C2+1 | 2 | 1+C2+2+C2+1 | 3 | 1+C2+2+C2+1 | 4 | 1+C3+2+C3+1 | 4 | 1+C3+2+C3+1 | 4 |
| | | ¼-½-¼ | 13.398 - 15.360 | 1+C2+0+C2+1 | 2 | 1+C2+0+C2+1 | 2 | 1+C2+0+C2+1 | 3 | 1+C3+0+C3+1 | 4 | 1+C3+0+C3+1 | 4 | 1+C4+0+C4+1 | 4 |
| | | ⅓-⅓-⅓ | 15.361 - 19.641 | 1+C2+0+C2+1 | 2 | 1+C2+0+C2+1 | 2 | 1+C2+0+C2+1 | 3 | 1+C3+0+C3+1 | 4 | 1+C3+0+C3+1 | 4 | 1+C4+0+C4+1 | 4 |
| | 75" | Custom | 11.391 - 13.397 | 1+C2+3+C2+1 | 2 | 1+C2+3+C2+1 | 2 | 1+C2+3+C2+1 | 3 | 1+C2+3+C2+1 | 4 | 1+C3+3+C3+1 | 4 | 1+C3+3+C3+1 | 4 |
| | | ¼-½-¼ | 13.398 - 19.110 | 1+C2+2+C2+1 | 2 | 1+C2+3+C2+1 | 2 | 1+C2+3+C2+1 | 3 | 1+C3+3+C3+1 | 4 | 1+C3+3+C3+1 | 4 | 1+C4+3+C4+1 | 4 |
| | | ⅓-⅓-⅓ | 19.111 - 24.641 | 1+C2+0+C2+1 | 2 | 1+C2+0+C2+1 | 2 | 1+C3+0+C3+1 | 3 | 1+C3+0+C3+1 | 4 | 1+C4+0+C4+1 | 4 | 1+C4+0+C4+1 | 4 |
| | 96" | Custom | 17.641 - 19.397 | 1+C2+3+C2+1 | 2 | 1+C2+3+C2+1 | 2 | 1+C2+4+C2+1 | 3 | 1+C3+4+C3+1 | 4 | 1+C3+4+C3+1 | 4 | 1+C4+4+C4+1 | 4 |
| | | ¼-½-¼ | 19.398 - 24.360 | 1+C2+3+C2+1 | 2 | 1+C2+3+C2+1 | 2 | 1+C2+4+C2+1 | 3 | 1+C3+4+C3+1 | 4 | 1+C3+4+C3+1 | 4 | 1+C4+4+C4+1 | 4 |
| | | ⅓-⅓-⅓ | 24.361 - 31.641 | 2+C2+2+C2+2 | 2 | 2+C2+3+C2+2 | 2 | 2+C2+3+C2+2 | 3 | 2+C3+3+C3+2 | 4 | 2+C3+3+C3+2 | 4 | 2+C4+3+C4+2 | 4 |
| | 120" | ¼-½-¼ | 29.641 - 32.515 | 2+C2+3+C2+2 | 2 | 2+C2+3+C2+2 | 2 | 2+C2+4+C2+2 | 3 | 2+C3+4+C3+2 | 4 | 2+C3+4+C3+2 | 4 | 2+C4+4+C4+2 | 4 |
| | | ⅓-⅓-⅓ | 32.516 - 39.641 | 2+C2+3+C2+2 | 2 | 2+C2+3+C2+2 | 2 | 2+C2+3+C2+2 | 3 | 2+C3+3+C3+2 | 4 | 2+C4+3+C4+2 | 4 | 2+C4+3+C4+2 | 4 |
| | 140" | Custom | ** - 39.641 | 2+C2+3+C2+2 | 2 | 2+C2+3+C2+2 | 2 | 2+C2+4+C2+2 | 3 | 2+C3+4+C3+2 | 4 | 2+C4+4+C4+2 | 4 | 2+C4+4+C4+2 | 4 |

**Anchor Group C**

| Window Buck Width | | | | 24" Height | | 30" Height | | 36" Height | | 48" Height | | 54" Height | | 63" Height | |
|---|---|---|---|---|---|---|---|---|---|---|---|---|---|---|---|
| | | | | Head & Sill | Jamb | Head & Sill | Jamb | Head & Sill | Jamb | Head & Sill | Jamb | Head & Sill | Jamb | Head & Sill | Jamb |
| | 35-1/4" | ⅓-⅓-⅓ | 11.391 - 11.391 | 1+C2+0+C2+1 | 2 | 1+C2+0+C2+1 | 2 | 1+C2+0+C2+1 | 3 | 1+C2+0+C2+1 | 4 | 1+C2+0+C2+1 | 4 | 1+C2+0+C2+1 | 4 |
| | 38" | ⅓-⅓-⅓ | 12.308 - 12.308 | 1+C2+0+C2+1 | 2 | 1+C2+0+C2+1 | 2 | 1+C2+0+C2+1 | 3 | 1+C2+0+C2+1 | 4 | 1+C2+0+C2+1 | 4 | 1+C2+0+C2+1 | 4 |
| | 45-1/8" | ¼-½-¼ | 11.391 - 13.397 | 1+C2+0+C2+1 | 2 | 1+C2+0+C2+1 | 2 | 1+C2+0+C2+1 | 3 | 1+C2+0+C2+1 | 4 | 1+C2+0+C2+1 | 4 | 1+C3+0+C3+1 | 4 |
| | | ⅓-⅓-⅓ | 13.398 - 14.683 | 1+C2+0+C2+1 | 2 | 1+C2+0+C2+1 | 2 | 1+C2+0+C2+1 | 3 | 1+C2+0+C2+1 | 4 | 1+C2+0+C2+1 | 4 | 1+C3+0+C3+1 | 4 |
| | 47-3/4" | ¼-½-¼ | 11.391 - 12.297 | 1+C2+0+C2+1 | 2 | 1+C2+0+C2+1 | 2 | 1+C2+0+C2+1 | 3 | 1+C2+0+C2+1 | 4 | 1+C3+0+C3+1 | 4 | 1+C3+0+C3+1 | 4 |
| | | ⅓-⅓-⅓ | 12.298 - 15.558 | 1+C2+0+C2+1 | 2 | 1+C2+0+C2+1 | 2 | 1+C2+0+C2+1 | 3 | 1+C2+0+C2+1 | 4 | 1+C3+0+C3+1 | 4 | 1+C3+0+C3+1 | 4 |
| | 52-1/8" | Custom | 11.391 - 12.016 | 1+C2+0+C2+1 | 2 | 1+C2+0+C2+1 | 2 | 1+C2+0+C2+1 | 3 | 1+C3+0+C3+1 | 4 | 1+C3+0+C3+1 | 4 | 1+C3+0+C3+1 | 4 |
| | | ¼-½-¼ | 12.017 - 13.397 | 1+C2+0+C2+1 | 2 | 1+C2+0+C2+1 | 2 | 1+C2+0+C2+1 | 3 | 1+C3+0+C3+1 | 4 | 1+C3+0+C3+1 | 4 | 1+C3+0+C3+1 | 4 |
| | | ⅓-⅓-⅓ | 13.398 - 17.016 | 1+C2+0+C2+1 | 2 | 1+C2+0+C2+1 | 2 | 1+C2+0+C2+1 | 3 | 1+C3+0+C3+1 | 4 | 1+C3+0+C3+1 | 4 | 1+C3+0+C3+1 | 4 |
| | 60" | Custom | 11.391 - 13.397 | 1+C2+2+C2+1 | 2 | 1+C2+2+C2+1 | 2 | 1+C2+2+C2+1 | 3 | 1+C2+2+C2+1 | 4 | 1+C3+2+C3+1 | 4 | 1+C3+2+C3+1 | 4 |
| | | ¼-½-¼ | 13.398 - 15.360 | 1+C2+1+C2+1 | 2 | 1+C2+1+C2+1 | 2 | 1+C2+1+C2+1 | 3 | 1+C2+1+C2+1 | 4 | 1+C3+1+C3+1 | 4 | 1+C3+1+C3+1 | 4 |
| | | ⅓-⅓-⅓ | 15.361 - 19.641 | 1+C2+0+C2+1 | 2 | 1+C2+0+C2+1 | 2 | 1+C2+0+C2+1 | 3 | 1+C3+0+C3+1 | 4 | 1+C3+0+C3+1 | 4 | 1+C4+0+C4+1 | 4 |
| | 75" | Custom | 11.391 - 13.397 | 1+C2+2+C2+1 | 2 | 1+C2+2+C2+1 | 2 | 1+C2+3+C2+1 | 3 | 1+C2+3+C2+1 | 4 | 1+C3+3+C3+1 | 4 | 1+C3+3+C3+1 | 4 |
| | | ¼-½-¼ | 13.398 - 19.110 | 1+C2+2+C2+1 | 2 | 1+C2+2+C2+1 | 2 | 1+C2+2+C2+1 | 3 | 1+C3+2+C3+1 | 4 | 1+C3+2+C3+1 | 4 | 1+C4+2+C4+1 | 4 |
| | | ⅓-⅓-⅓ | 19.111 - 24.641 | 1+C2+0+C2+1 | 2 | 1+C2+0+C2+1 | 2 | 1+C3+0+C3+1 | 3 | 1+C3+0+C3+1 | 4 | 1+C4+0+C4+1 | 4 | 1+C4+0+C4+1 | 4 |
| | 96" | Custom | 17.641 - 19.397 | 1+C2+3+C2+1 | 2 | 1+C2+3+C2+1 | 2 | 1+C2+3+C2+1 | 3 | 1+C3+4+C3+1 | 4 | 1+C3+4+C3+1 | 4 | 1+C4+4+C4+1 | 4 |
| | | ¼-½-¼ | 19.398 - 24.360 | 1+C2+2+C2+1 | 2 | 1+C2+3+C2+1 | 2 | 1+C2+3+C2+1 | 3 | 1+C3+3+C3+1 | 4 | 1+C3+3+C3+1 | 4 | 1+C4+3+C4+1 | 4 |
| | | ⅓-⅓-⅓ | 24.361 - 31.641 | 1+C2+2+C2+1 | 2 | 1+C2+2+C2+1 | 2 | 1+C2+2+C2+1 | 3 | 1+C3+2+C3+1 | 4 | 1+C3+2+C3+1 | 4 | 1+C4+2+C4+1 | 4 |
| | 120" | ¼-½-¼ | 29.641 - 32.515 | 2+C2+3+C2+2 | 2 | 2+C2+3+C2+2 | 2 | 2+C2+3+C2+2 | 3 | 2+C3+4+C3+2 | 4 | 2+C3+4+C3+2 | 4 | 2+C4+4+C4+2 | 4 |
| | | ⅓-⅓-⅓ | 32.516 - 39.641 | 2+C2+2+C2+2 | 2 | 2+C2+3+C2+2 | 2 | 2+C2+3+C2+2 | 3 | 2+C3+3+C3+2 | 4 | 2+C4+3+C4+2 | 4 | 2+C4+3+C4+2 | 4 |
| | 140" | Custom | ** - 39.641 | 2+C2+3+C2+2 | 2 | 2+C2+3+C2+2 | 2 | 2+C2+3+C2+2 | 3 | 2+C3+4+C3+2 | 4 | 2+C4+4+C4+2 | 4 | 2+C4+4+C4+2 | 4 |

**Anchor Group D**

| Window Buck Width | | | | 24" Height | | 30" Height | | 36" Height | | 48" Height | | 54" Height | | 63" Height | |
|---|---|---|---|---|---|---|---|---|---|---|---|---|---|---|---|
| | | | | Head & Sill | Jamb | Head & Sill | Jamb | Head & Sill | Jamb | Head & Sill | Jamb | Head & Sill | Jamb | Head & Sill | Jamb |
| | 35-1/4" | ⅓-⅓-⅓ | 11.391 - 11.391 | 1+C2+0+C2+1 | 2 | 1+C2+0+C2+1 | 2 | 1+C2+0+C2+1 | 3 | 1+C2+0+C2+1 | 4 | 1+C2+0+C2+1 | 4 | 1+C2+0+C2+1 | 4 |
| | 38" | ⅓-⅓-⅓ | 12.308 - 12.308 | 1+C2+0+C2+1 | 2 | 1+C2+0+C2+1 | 2 | 1+C2+0+C2+1 | 3 | 1+C2+0+C2+1 | 4 | 1+C2+0+C2+1 | 4 | 1+C2+0+C2+1 | 4 |
| | 45-1/8" | ¼-½-¼ | 11.391 - 13.397 | 1+C2+0+C2+1 | 2 | 1+C2+0+C2+1 | 2 | 1+C2+0+C2+1 | 3 | 1+C2+0+C2+1 | 4 | 1+C2+0+C2+1 | 4 | 1+C3+0+C3+1 | 4 |
| | | ⅓-⅓-⅓ | 13.398 - 14.683 | 1+C2+0+C2+1 | 2 | 1+C2+0+C2+1 | 2 | 1+C2+0+C2+1 | 3 | 1+C2+0+C2+1 | 4 | 1+C2+0+C2+1 | 4 | 1+C3+0+C3+1 | 4 |
| | 47-3/4" | ¼-½-¼ | 11.391 - 12.297 | 1+C2+0+C2+1 | 2 | 1+C2+0+C2+1 | 2 | 1+C2+0+C2+1 | 3 | 1+C2+0+C2+1 | 4 | 1+C3+0+C3+1 | 4 | 1+C3+0+C3+1 | 4 |
| | | ⅓-⅓-⅓ | 12.298 - 15.558 | 1+C2+0+C2+1 | 2 | 1+C2+0+C2+1 | 2 | 1+C2+0+C2+1 | 3 | 1+C2+0+C2+1 | 4 | 1+C3+0+C3+1 | 4 | 1+C3+0+C3+1 | 4 |
| | 52-1/8" | Custom | 11.391 - 12.016 | 1+C2+0+C2+1 | 2 | 1+C2+0+C2+1 | 2 | 1+C2+0+C2+1 | 3 | 1+C3+0+C3+1 | 4 | 1+C3+0+C3+1 | 4 | 1+C3+0+C3+1 | 4 |
| | | ¼-½-¼ | 12.017 - 13.397 | 1+C2+0+C2+1 | 2 | 1+C2+0+C2+1 | 2 | 1+C2+0+C2+1 | 3 | 1+C3+0+C3+1 | 4 | 1+C3+0+C3+1 | 4 | 1+C3+0+C3+1 | 4 |
| | | ⅓-⅓-⅓ | 13.398 - 17.016 | 1+C2+0+C2+1 | 2 | 1+C2+0+C2+1 | 2 | 1+C2+0+C2+1 | 3 | 1+C3+0+C3+1 | 4 | 1+C3+0+C3+1 | 4 | 1+C3+0+C3+1 | 4 |
| | 60" | Custom | 11.391 - 13.397 | 1+C2+2+C2+1 | 2 | 1+C2+2+C2+1 | 2 | 1+C2+2+C2+1 | 3 | 1+C2+2+C2+1 | 4 | 1+C3+2+C3+1 | 4 | 1+C3+2+C3+1 | 4 |
| | | ¼-½-¼ | 13.398 - 15.360 | 1+C2+1+C2+1 | 2 | 1+C2+1+C2+1 | 2 | 1+C2+1+C2+1 | 3 | 1+C2+1+C2+1 | 4 | 1+C3+1+C3+1 | 4 | 1+C3+1+C3+1 | 4 |
| | | ⅓-⅓-⅓ | 15.361 - 19.641 | 1+C2+0+C2+1 | 2 | 1+C2+0+C2+1 | 2 | 1+C2+0+C2+1 | 3 | 1+C3+0+C3+1 | 4 | 1+C3+0+C3+1 | 4 | 1+C4+0+C4+1 | 4 |
| | 75" | Custom | 11.391 - 13.397 | 1+C2+2+C2+1 | 2 | 1+C2+2+C2+1 | 2 | 1+C2+3+C2+1 | 3 | 1+C2+3+C2+1 | 4 | 1+C3+3+C3+1 | 4 | 1+C3+3+C3+1 | 4 |
| | | ¼-½-¼ | 13.398 - 19.110 | 1+C2+2+C2+1 | 2 | 1+C2+2+C2+1 | 2 | 1+C2+2+C2+1 | 3 | 1+C3+2+C3+1 | 4 | 1+C3+2+C3+1 | 4 | 1+C4+2+C4+1 | 4 |
| | | ⅓-⅓-⅓ | 19.111 - 24.641 | 1+C2+0+C2+1 | 2 | 1+C2+0+C2+1 | 2 | 1+C3+0+C3+1 | 3 | 1+C3+0+C3+1 | 4 | 1+C4+0+C4+1 | 4 | 1+C4+0+C4+1 | 4 |
| | 96" | Custom | 17.641 - 19.397 | 1+C2+3+C2+1 | 2 | 1+C2+3+C2+1 | 2 | 1+C2+3+C2+1 | 3 | 1+C3+4+C3+1 | 4 | 1+C3+4+C3+1 | 4 | 1+C4+4+C4+1 | 4 |
| | | ¼-½-¼ | 19.398 - 24.360 | 1+C2+2+C2+1 | 2 | 1+C2+3+C2+1 | 2 | 1+C2+3+C2+1 | 3 | 1+C3+3+C3+1 | 4 | 1+C3+3+C3+1 | 4 | 1+C4+3+C4+1 | 4 |
| | | ⅓-⅓-⅓ | 24.361 - 31.641 | 1+C2+2+C2+1 | 2 | 1+C2+2+C2+1 | 2 | 1+C2+2+C2+1 | 3 | 1+C3+2+C3+1 | 4 | 1+C3+2+C3+1 | 4 | 1+C4+2+C4+1 | 4 |
| | 120" | ¼-½-¼ | 29.641 - 32.515 | 2+C2+3+C2+2 | 2 | 2+C2+3+C2+2 | 2 | 2+C2+3+C2+2 | 3 | 2+C3+4+C3+2 | 4 | 2+C3+4+C3+2 | 4 | 2+C4+4+C4+2 | 4 |
| | | ⅓-⅓-⅓ | 32.516 - 39.641 | 2+C2+2+C2+2 | 2 | 2+C2+3+C2+2 | 2 | 2+C2+3+C2+2 | 3 | 2+C3+3+C3+2 | 4 | 2+C4+3+C4+2 | 4 | 2+C4+3+C4+2 | 4 |
| | 140" | Custom | ** - 39.641 | 2+C2+3+C2+2 | 2 | 2+C2+3+C2+2 | 2 | 2+C2+3+C2+2 | 3 | 2+C3+4+C3+2 | 4 | 2+C4+4+C4+2 | 4 | 2+C4+4+C4+2 | 4 |

SEE TABLE 15 FOR DESIGN PRESSURE

GLASS TYPES 10-12 & 14-16 MAY NOT BE USED WITH J-CHANNEL OR INTEGRAL FIN FRAMES

** MIN. SASH SIZE = $\frac{\text{WINDOW WIDTH - 60.72}}{2}$

NOTES:
1) FRAME DIMENSIONS ARE BUCK WIDTH AND BUCK HEIGHT (SEE SHEETS 3-4).
SASH SIZE IS AS PER THE FIGURES ON SHEETS 6-8.
2) FOR SIZES NOT SHOWN, ROUND UP TO THE NEXT AVAILABLE WIDTH OR HEIGHT DIMENSION SHOWN ON THE TABLE.
3) SEE SHEET 9 FOR A GUIDE TO USING THESE TABLES.
4) "1/4-1/2-1/4" AND "1/3-1/3-1/3" INDICATE THAT THOSE STANDARD SASH CONFIGURATIONS FALL WITHIN THE SASH WIDTH RANGE IN THE ADJACENT COLUMN. "CUSTOM" INDICATES THAT NO STANDARD SASH CONFIGURATIONS FALL WITHIN THE RANGE.

**PRODUCT REVISED**
as complying with the Florida Building Code
NOA-No. 20-0406.01
Expiration Date 09/24/2025
By
Miami-Dade Product Control

Revision: C) NO CHANGES THIS SHEET. AK - 03/27/20


PGT®
1070 TECHNOLOGY DRIVE
N. VENICE, FL 34275
(941)-480-1600
REGISTRATION #29296


| Title | Date | Drawn By | DWG No. | Rev. |
|---|---|---|---|---|
| ANCHOR QUANTITY TABLES | 05/15/15 | J ROSOWSKI | MD-HR5510-01 | C |

| Desc. | Scale | Sheet | Series |
|---|---|---|---|
| HORIZONTAL ROLLER - LM | NTS | 15 OF 18 | HR-5510 |

ANTHONY LYNN MILLER LICENSE No. 58705 STATE OF FLORIDA PROFESSIONAL ENGINEER
4/2/20

A. LYNN MILLER, P.E.
P.E.# 58705

TABLE 27: MINIMUM ANCHOR QUANTITIES SHOWN. ALL ANCHORAGE MUST ALSO COMPLY WITH THE MAX. O.C. SPACING SHOWN ON THE ELEVATIONS.

| Glass Types 14 - 16 | | Sash Configuration | Sash Width Range (in) | Anchor Quantities for XOX Windows | | | | | | | | | | | | | | | | | | | |
|---|---|---|---|---|---|---|---|---|---|---|---|---|---|---|---|---|---|---|---|---|---|---|---|
| Reinf. Level R4 | | | | 24" Height | | 30" Height | | 36" Height | | 48" Height | | 54" Height | | 63" Height | | 24" Height | | 30" Height | | 36" Height | | 48" Height | |
| | | | | Head & Sill | Jamb | Head & Sill | Jamb | Head & Sill | Jamb | Head & Sill | Jamb | Head & Sill | Jamb | Head & Sill | Jamb | Head & Sill | Jamb | Head & Sill | Jamb | Head & Sill | Jamb | Head & Sill | Jamb |
| | | | | Anchor Group A | | | | | | | | | | | | Anchor Group C | | | | | | | |
| Window Buck Width | 35-1/4" | ⅓-⅓-⅓ | 11.391 - 11.391 | Not Allowed | | | | | | | | | | | | 1+C2+0+C2+1 | 2 | 1+C2+0+C2+1 | 2 | 1+C2+0+C2+1 | 3 | 1+C2+0+C2+1 | 4 |
| | 38" | ⅓-⅓-⅓ | 12.308 - 12.308 | | | | | | | | | | | | | 1+C2+0+C2+1 | 2 | 1+C2+0+C2+1 | 2 | 1+C2+0+C2+1 | 3 | 1+C2+0+C2+1 | 4 |
| | 45-1/8" | ¼-½-¼ | 11.391 - 13.397 | | | | | | | | | | | | | 1+C2+0+C2+1 | 2 | 1+C2+0+C2+1 | 2 | 1+C2+0+C2+1 | 3 | 1+C3+0+C3+1 | 4 |
| | | ⅓-⅓-⅓ | 13.398 - 14.683 | | | | | | | | | | | | | 1+C2+0+C2+1 | 2 | 1+C2+0+C2+1 | 2 | 1+C2+0+C2+1 | 3 | 1+C3+0+C3+1 | 4 |
| | 47-3/4" | ¼-½-¼ | 11.391 - 12.297 | | | | | | | | | | | | | 1+C2+0+C2+1 | 2 | 1+C2+0+C2+1 | 2 | 1+C2+0+C2+1 | 3 | 1+C3+0+C3+1 | 4 |
| | | ⅓-⅓-⅓ | 12.298 - 15.558 | | | | | | | | | | | | | 1+C2+0+C2+1 | 2 | 1+C2+0+C2+1 | 2 | 1+C2+0+C2+1 | 3 | 1+C3+0+C3+1 | 4 |
| | 52-1/8" | Custom | 11.391 - 12.016 | | | | | | | | | | | | | 1+C2+0+C2+1 | 2 | 1+C2+0+C2+1 | 2 | 1+C3+0+C3+1 | 3 | 1+C3+0+C3+1 | 4 |
| | | ¼-½-¼ | 12.017 - 13.397 | | | | | | | | | | | | | 1+C2+0+C2+1 | 2 | 1+C2+0+C2+1 | 2 | 1+C3+0+C3+1 | 3 | 1+C3+0+C3+1 | 4 |
| | | ⅓-⅓-⅓ | 13.398 - 17.016 | | | | | | | | | | | | | 1+C2+0+C2+1 | 2 | 1+C2+0+C2+1 | 2 | 1+C3+0+C3+1 | 3 | 1+C3+0+C3+1 | 4 |
| | 60" | Custom | 11.391 - 13.397 | | | | | | | | | | | | | 1+C2+2+C2+1 | 2 | 1+C2+2+C2+1 | 2 | 1+C2+2+C2+1 | 3 | 1+C3+2+C3+1 | 4 |
| | | ¼-½-¼ | 13.398 - 15.360 | | | | | | | | | | | | | 1+C2+1+C2+1 | 2 | 1+C2+2+C2+1 | 2 | 1+C2+2+C2+1 | 3 | 1+C3+2+C3+1 | 4 |
| | | ⅓-⅓-⅓ | 15.361 - 19.641 | | | | | | | | | | | | | 1+C2+0+C2+1 | 2 | 1+C2+0+C2+1 | 2 | 1+C3+0+C3+1 | 3 | 1+C4+0+C4+1 | 4 |
| | 75" | Custom | 11.391 - 13.397 | | | | | | | | | | | | | 1+C2+2+C2+1 | 2 | 1+C2+3+C2+1 | 2 | 1+C2+3+C2+1 | 3 | 1+C3+3+C3+1 | 4 |
| | | ¼-½-¼ | 13.398 - 19.110 | | | | | | | | | | | | | 1+C2+2+C2+1 | 2 | 1+C2+2+C2+1 | 2 | 1+C2+3+C2+1 | 3 | 1+C3+3+C3+1 | 4 |
| | | ⅓-⅓-⅓ | 19.111 - 24.641 | | | | | | | | | | | | | 1+C2+0+C2+1 | 2 | 1+C3+0+C3+1 | 2 | 1+C3+0+C3+1 | 3 | 1+C4+0+C4+1 | 4 |
| | 96" | Custom | 17.641 - 19.397 | | | | | | | | | | | | | 1+C2+3+C2+1 | 2 | 1+C2+3+C2+1 | 2 | 1+C2+3+C2+1 | 3 | 1+C3+4+C3+1 | 4 |
| | | ¼-½-¼ | 19.398 - 24.360 | | | | | | | | | | | | | 1+C2+3+C2+1 | 2 | 1+C2+3+C2+1 | 2 | 1+C2+3+C2+1 | 3 | 1+C4+4+C4+1 | 4 |
| | | ⅓-⅓-⅓ | 24.361 - 31.641 | | | | | | | | | | | | | 1+C2+2+C2+1 | 2 | 2+C2+2+C2+2 | 2 | 2+C2+2+C2+2 | 3 | 2+C4+3+C4+2 | 4 |
| | 120" | ¼-½-¼ | 29.641 - 32.515 | | | | | | | | | | | | | 2+C2+3+C2+2 | 2 | 2+C2+3+C2+2 | 2 | 2+C2+3+C2+2 | 3 | 2+C4+4+C4+2 | 4 |
| | | ⅓-⅓-⅓ | 32.516 - 39.641 | | | | | | | | | | | | | 2+C2+2+C2+2 | 2 | 2+C2+3+C2+2 | 2 | 2+C2+3+C2+2 | 3 | 2+C4+3+C4+2 | 4 |
| | 140" | Custom | ** - 39.641 | | | | | | | | | | | | | 2+C2+3+C2+2 | 2 | 2+C2+3+C2+2 | 2 | 2+C2+3+C2+2 | 3 | 2+C4+4+C4+2 | 4 |
| | | | | Anchor Group B | | | | | | | | | | | | Anchor Group D | | | | | | | |
| Window Buck Width | 35-1/4" | ⅓-⅓-⅓ | 11.391 - 11.391 | 1+C2+0+C2+1 | 2 | 1+C2+0+C2+1 | 2 | 1+C2+0+C2+1 | 3 | 1+C2+0+C2+1 | 4 | 1+C2+0+C2+1 | 4 | 1+C2+0+C2+1 | 4 | 1+C2+0+C2+1 | 2 | 1+C2+0+C2+1 | 2 | 1+C2+0+C2+1 | 3 | 1+C2+0+C2+1 | 4 |
| | 38" | ⅓-⅓-⅓ | 12.308 - 12.308 | 1+C2+0+C2+1 | 2 | 1+C2+0+C2+1 | 2 | 1+C2+0+C2+1 | 3 | 1+C2+0+C2+1 | 4 | 1+C2+0+C2+1 | 4 | 1+C3+0+C3+1 | 4 | 1+C2+0+C2+1 | 2 | 1+C2+0+C2+1 | 2 | 1+C2+0+C2+1 | 3 | 1+C2+0+C2+1 | 4 |
| | 45-1/8" | ¼-½-¼ | 11.391 - 13.397 | 1+C2+0+C2+1 | 2 | 1+C2+0+C2+1 | 2 | 1+C2+0+C2+1 | 3 | 1+C3+0+C3+1 | 4 | 1+C3+0+C3+1 | 4 | 1+C4+0+C4+1 | 4 | 1+C2+0+C2+1 | 2 | 1+C2+0+C2+1 | 2 | 1+C2+0+C2+1 | 3 | 1+C3+0+C3+1 | 4 |
| | | ⅓-⅓-⅓ | 13.398 - 14.683 | 1+C2+0+C2+1 | 2 | 1+C2+0+C2+1 | 2 | 1+C2+0+C2+1 | 3 | 1+C3+0+C3+1 | 4 | 1+C3+0+C3+1 | 4 | 1+C3+0+C3+1 | 4 | 1+C2+0+C2+1 | 2 | 1+C2+0+C2+1 | 2 | 1+C2+0+C2+1 | 3 | 1+C3+0+C3+1 | 4 |
| | 47-3/4" | ¼-½-¼ | 11.391 - 12.297 | 1+C2+0+C2+1 | 2 | 1+C2+0+C2+1 | 2 | 1+C2+0+C2+1 | 3 | 1+C3+0+C3+1 | 4 | 1+C3+0+C3+1 | 4 | 1+C4+0+C4+1 | 4 | 1+C2+0+C2+1 | 2 | 1+C2+0+C2+1 | 2 | 1+C2+0+C2+1 | 3 | 1+C3+0+C3+1 | 4 |
| | | ⅓-⅓-⅓ | 12.298 - 15.558 | 1+C2+0+C2+1 | 2 | 1+C2+0+C2+1 | 2 | 1+C2+0+C2+1 | 3 | 1+C3+0+C3+1 | 4 | 1+C3+0+C3+1 | 4 | 1+C3+0+C3+1 | 4 | 1+C2+0+C2+1 | 2 | 1+C2+0+C2+1 | 2 | 1+C2+0+C2+1 | 3 | 1+C3+0+C3+1 | 4 |
| | 52-1/8" | Custom | 11.391 - 12.016 | 1+C2+0+C2+1 | 2 | 1+C2+0+C2+1 | 2 | 1+C3+0+C3+1 | 3 | 1+C3+0+C3+1 | 4 | 1+C4+0+C4+1 | 4 | 1+C4+0+C4+1 | 4 | 1+C2+0+C2+1 | 2 | 1+C2+0+C2+1 | 2 | 1+C3+0+C3+1 | 3 | 1+C3+0+C3+1 | 4 |
| | | ¼-½-¼ | 12.017 - 13.397 | 1+C2+0+C2+1 | 2 | 1+C2+0+C2+1 | 2 | 1+C3+0+C3+1 | 3 | 1+C3+0+C3+1 | 4 | 1+C4+0+C4+1 | 4 | 1+C4+0+C4+1 | 4 | 1+C2+0+C2+1 | 2 | 1+C2+0+C2+1 | 2 | 1+C3+0+C3+1 | 3 | 1+C3+0+C3+1 | 4 |
| | | ⅓-⅓-⅓ | 13.398 - 17.016 | 1+C2+0+C2+1 | 2 | 1+C2+0+C2+1 | 2 | 1+C3+0+C3+1 | 3 | 1+C3+0+C3+1 | 4 | 1+C4+0+C4+1 | 4 | 1+C4+0+C4+1 | 4 | 1+C2+0+C2+1 | 2 | 1+C2+0+C2+1 | 2 | 1+C3+0+C3+1 | 3 | 1+C3+0+C3+1 | 4 |
| | 60" | Custom | 11.391 - 13.397 | 1+C2+2+C2+1 | 2 | 1+C2+2+C2+1 | 2 | 1+C2+2+C2+1 | 3 | 1+C3+2+C3+1 | 4 | 1+C3+2+C3+1 | 4 | 1+C4+2+C4+1 | 4 | 1+C2+2+C2+1 | 2 | 1+C2+2+C2+1 | 2 | 1+C2+2+C2+1 | 3 | 1+C3+2+C3+1 | 4 |
| | | ¼-½-¼ | 13.398 - 15.360 | 1+C2+2+C2+1 | 2 | 1+C2+2+C2+1 | 2 | 1+C2+2+C2+1 | 3 | 1+C3+2+C3+1 | 4 | 1+C3+2+C3+1 | 4 | 1+C4+2+C4+1 | 4 | 1+C2+1+C2+1 | 2 | 1+C2+1+C2+1 | 2 | 1+C2+1+C2+1 | 3 | 1+C3+1+C3+1 | 4 |
| | | ⅓-⅓-⅓ | 15.361 - 19.641 | 1+C2+0+C2+1 | 2 | 1+C2+0+C2+1 | 2 | 1+C3+0+C3+1 | 3 | 1+C4+0+C4+1 | 4 | 1+C4+0+C4+1 | 4 | 1+C5+0+C5+1 | 4 | 1+C2+0+C2+1 | 2 | 1+C2+0+C2+1 | 2 | 1+C3+0+C3+1 | 3 | 1+C4+0+C4+1 | 4 |
| | 75" | Custom | 11.391 - 13.397 | 1+C2+3+C2+1 | 2 | 1+C2+3+C2+1 | 2 | 1+C2+3+C2+1 | 3 | 1+C3+3+C3+1 | 4 | 1+C4+3+C4+1 | 4 | 1+C4+3+C4+1 | 4 | 1+C2+2+C2+1 | 2 | 1+C2+2+C2+1 | 2 | 1+C2+3+C2+1 | 3 | 1+C3+3+C3+1 | 4 |
| | | ¼-½-¼ | 13.398 - 19.110 | 1+C2+2+C2+1 | 2 | 1+C2+3+C2+1 | 2 | 1+C2+3+C2+1 | 3 | 1+C3+3+C3+1 | 4 | 1+C4+3+C4+1 | 4 | 1+C4+3+C4+1 | 4 | 1+C2+2+C2+1 | 2 | 1+C2+2+C2+1 | 2 | 1+C2+2+C2+1 | 3 | 1+C3+2+C3+1 | 4 |
| | | ⅓-⅓-⅓ | 19.111 - 24.641 | 1+C2+0+C2+1 | 2 | 1+C3+0+C3+1 | 2 | 1+C3+0+C3+1 | 3 | 1+C4+0+C4+1 | 4 | 1+C5+0+C5+1 | 4 | 1+C5+0+C5+1 | 4 | 1+C2+0+C2+1 | 2 | 1+C3+0+C3+1 | 2 | 1+C3+0+C3+1 | 3 | 1+C4+0+C4+1 | 4 |
| | 96" | Custom | 17.641 - 19.397 | 1+C2+3+C2+1 | 2 | 1+C2+3+C2+1 | 2 | 1+C2+4+C2+1 | 3 | 1+C3+4+C3+1 | 4 | 1+C4+4+C4+1 | 4 | 1+C4+4+C4+1 | 4 | 1+C2+3+C2+1 | 2 | 1+C2+3+C2+1 | 2 | 1+C2+3+C2+1 | 3 | 1+C3+4+C3+1 | 4 |
| | | ¼-½-¼ | 19.398 - 24.360 | 1+C2+3+C2+1 | 2 | 1+C2+3+C2+1 | 2 | 1+C2+4+C2+1 | 3 | 1+C4+4+C4+1 | 4 | 1+C4+4+C4+1 | 4 | 1+C4+3+C4+1 | 4 | 1+C2+2+C2+1 | 2 | 1+C2+3+C2+1 | 2 | 1+C2+3+C2+1 | 3 | 1+C4+3+C4+1 | 4 |
| | | ⅓-⅓-⅓ | 24.361 - 31.641 | 2+C2+2+C2+2 | 2 | 2+C2+3+C2+2 | 2 | 2+C2+3+C2+2 | 3 | 2+C4+3+C4+2 | 4 | 2+C4+3+C4+2 | 4 | 1+C4+2+C4+1 | 4 | 1+C2+2+C2+1 | 2 | 1+C2+2+C2+1 | 2 | 1+C2+2+C2+1 | 3 | 1+C4+2+C4+1 | 4 |
| | 120" | ¼-½-¼ | 29.641 - 32.515 | 2+C2+3+C2+2 | 2 | 2+C2+3+C2+2 | 2 | 2+C2+4+C2+2 | 3 | 2+C4+4+C4+2 | 4 | 2+C4+4+C4+2 | 4 | 2+C4+4+C4+2 | 4 | 2+C2+3+C2+2 | 2 | 2+C2+3+C2+2 | 2 | 2+C2+3+C2+2 | 3 | 2+C4+4+C4+2 | 4 |
| | | ⅓-⅓-⅓ | 32.516 - 39.641 | 2+C2+3+C2+2 | 2 | 2+C2+3+C2+2 | 2 | 2+C2+3+C2+2 | 3 | 2+C4+4+C4+2 | 4 | 2+C4+4+C4+2 | 4 | 2+C4+3+C4+2 | 4 | 2+C2+2+C2+2 | 2 | 2+C2+3+C2+2 | 2 | 2+C2+3+C2+2 | 3 | 2+C4+3+C4+2 | 4 |
| | 140" | Custom | ** - 39.641 | 2+C2+3+C2+2 | 2 | 2+C2+3+C2+2 | 2 | 2+C2+4+C2+2 | 3 | 2+C4+4+C4+2 | 4 | 2+C4+4+C4+2 | 4 | 2+C4+3+C4+2 | 4 | 2+C2+3+C2+2 | 2 | 2+C2+3+C2+2 | 2 | 2+C2+3+C2+2 | 3 | 2+C4+4+C4+2 | 4 |

| 54" Height | | 63" Height | |
|---|---|---|---|
| Head & Sill | Jamb | Head & Sill | Jamb |
| Anchor Group C | | | |
| 1+C2+0+C2+1 | 4 | 1+C2+0+C2+1 | 4 |
| 1+C2+0+C2+1 | 4 | 1+C3+0+C3+1 | 4 |
| 1+C3+0+C3+1 | 4 | 1+C4+0+C4+1 | 4 |
| 1+C3+0+C3+1 | 4 | 1+C3+0+C3+1 | 4 |
| 1+C3+0+C3+1 | 4 | 1+C4+0+C4+1 | 4 |
| 1+C3+0+C3+1 | 4 | 1+C3+0+C3+1 | 4 |
| 1+C3+0+C3+1 | 4 | 1+C4+0+C4+1 | 4 |
| 1+C3+0+C3+1 | 4 | 1+C4+0+C4+1 | 4 |
| 1+C3+0+C3+1 | 4 | 1+C4+0+C4+1 | 4 |
| 1+C3+2+C3+1 | 4 | 1+C4+2+C4+1 | 4 |
| 1+C3+2+C3+1 | 4 | 1+C4+2+C4+1 | 4 |
| 1+C4+0+C4+1 | 4 | 1+C5+0+C5+1 | 4 |
| 1+C3+3+C3+1 | 4 | 1+C4+3+C4+1 | 4 |
| 1+C3+3+C3+1 | 4 | 1+C4+3+C4+1 | 4 |
| 1+C4+0+C4+1 | 4 | 1+C5+0+C5+1 | 4 |
| 1+C3+4+C3+1 | 4 | 1+C4+4+C4+1 | 4 |
| 1+C4+4+C4+1 | 4 | 1+C4+3+C4+1 | 4 |
| 2+C4+3+C4+2 | 4 | 1+C4+2+C4+1 | 4 |
| 2+C4+4+C4+2 | 4 | 2+C4+3+C4+2 | 4 |
| 2+C4+3+C4+2 | 4 | 2+C4+3+C4+2 | 4 |
| 2+C4+4+C4+2 | 4 | 2+C4+3+C4+2 | 4 |
| Anchor Group D | | | |
| 1+C2+0+C2+1 | 4 | 1+C2+0+C2+1 | 4 |
| 1+C2+0+C2+1 | 4 | 1+C3+0+C3+1 | 4 |
| 1+C3+0+C3+1 | 4 | 1+C4+0+C4+1 | 4 |
| 1+C3+0+C3+1 | 4 | 1+C3+0+C3+1 | 4 |
| 1+C3+0+C3+1 | 4 | 1+C4+0+C4+1 | 4 |
| 1+C3+0+C3+1 | 4 | 1+C3+0+C3+1 | 4 |
| 1+C3+0+C3+1 | 4 | 1+C4+0+C4+1 | 4 |
| 1+C3+0+C3+1 | 4 | 1+C4+0+C4+1 | 4 |
| 1+C3+0+C3+1 | 4 | 1+C4+0+C4+1 | 4 |
| 1+C3+2+C3+1 | 4 | 1+C4+2+C4+1 | 4 |
| 1+C3+1+C3+1 | 4 | 1+C4+1+C4+1 | 4 |
| 1+C4+0+C4+1 | 4 | 1+C5+0+C5+1 | 4 |
| 1+C3+3+C3+1 | 4 | 1+C4+3+C4+1 | 4 |
| 1+C3+2+C3+1 | 4 | 1+C4+2+C4+1 | 4 |
| 1+C3+0+C3+1 | 4 | 1+C5+0+C5+1 | 4 |
| 1+C3+4+C3+1 | 4 | 1+C4+4+C4+1 | 4 |
| 1+C4+3+C4+1 | 4 | 1+C4+3+C4+1 | 4 |
| 1+C4+2+C4+1 | 4 | 1+C4+2+C4+1 | 4 |
| 2+C4+4+C4+2 | 4 | 2+C4+3+C4+2 | 4 |
| 2+C4+3+C4+2 | 4 | 2+C4+3+C4+2 | 4 |
| 2+C4+4+C4+2 | 4 | 2+C4+3+C4+2 | 4 |

SEE TABLE 16 FOR DESIGN PRESSURE

GLASS TYPES 10-12 & 14-16 MAY NOT BE USED WITH J-CHANNEL OR INTEGRAL FIN FRAMES

** MIN. SASH SIZE = $\frac{\text{WINDOW WIDTH - 60.72}}{2}$

NOTES:
1) FRAME DIMENSIONS ARE BUCK WIDTH AND BUCK HEIGHT (SEE SHEETS 3-4). SASH SIZE IS AS PER THE FIGURES ON SHEETS 6-8.
2) FOR SIZES NOT SHOWN, ROUND UP TO THE NEXT AVAILABLE WIDTH OR HEIGHT DIMENSION SHOWN ON THE TABLE.
3) SEE SHEET 9 FOR A GUIDE TO USING THESE TABLES.
4) "1/4-1/2-1/4" AND "1/3-1/3-1/3" INDICATE THAT THOSE STANDARD SASH CONFIGURATIONS FALL WITHIN THE SASH WIDTH RANGE IN THE ADJACENT COLUMN. "CUSTOM" INDICATES THAT NO STANDARD SASH CONFIGURATIONS FALL WITHIN THE RANGE.

**PRODUCT REVISED**
as complying with the Florida Building Code
NOA-No. 20-0406.01
Expiration Date 09/24/2025
By
Miami-Dade Product Control

Revision: C) NO CHANGES THIS SHEET. AK - 03/27/20

1070 TECHNOLOGY DRIVE
N. VENICE, FL 34275
(941)-480-1600
REGISTRATION #29296

| Series | Desc. | Title | Scale | Sheet | DWG No. | Drawn By | Date | Rev. |
|---|---|---|---|---|---|---|---|---|
| MD-HR5510-01 | HR-5510 | ANCHOR QUANTITY TABLES | NTS | 16 OF 18 | | J ROSOWSKI | 05/15/15 | C |

ANTHONY LYNN MILLER LICENSE No. 58705 STATE OF FLORIDA PROFESSIONAL ENGINEER
4/2/20
A. LYNN MILLER, P.E.
P.E.# 58705

TABLE 28:

## Bill of Material

| # | Part # | Description | Material |
|---|---|---|---|
| 1 | 620121 | Frame Head, Sill and Jambs - J-Channel | PVC |
| 2 | 620122 | Frame Head, Sill and Jambs - Flange | PVC |
| 3 | 620123 | Frame Head, Sill and Jambs - Fin | PVC |
| 4 | 620124 | Frame Head, Sill and Jambs - Equal Leg | PVC |
| 13 | 620172 | Anti-Lift Insert / Trim Cover | PVC |
| 14 | 620131 | Fixed Meeting Rail | PVC |
| 15 | 620158 | Track Insert | 6063 T6 Al |
| 16 | 620129 | Sash Rail (Sides, Top & Bottom) | PVC |
| 17 | 620166 | Monorail | 6063 T6 Al |
| 19 | 620156 | Pull Rail Interlock | 6063 T6 Al |
| 20 | 620144 | Pull Rail Interlock Cover | PVC |
| 21 | 620150 | Light Sash Reinforcement | 6063 T6 Al |
| 22 | 620151 | Standard Sash Reinforcement | 6063 T6 Al |
| 23 | 620152 | HD Sash Reinforcement | 6063 T6 Al |
| 24 | 620153 | Standard Meeting Rail Reinforcement | 6005 T5 Al |
| 25 | 620154 | HD Meeting Rail Reinforcement | 6005 T5 Al |
| 26 | 620155 | H.D. Horiz. Roller Meeting Rail Reinforcement | 6005 T5 Al |
| 27 | 710X114PPA | #10 x 1-1/4" PH. PH SDS (Monorail Screw) | 410 SS |
| 28 | 61644 | Weatherstrip, .187" x .270" Fin Pile | |
| 29 | 61719 | Weatherstrip, .187" x .220" Poly Pile | |
| 30 | | #8 x 1" Ph. PH SDS (Interlock Mounting Screw) | 410 SS |
| 31 | 78X312PPA | #8 x 3-1/2" Ph. PH SMS (Fixed Meeting Rail Screw) | 410 SS |
| 32 | 71669SP | Meeting Rail Screw Support Plate | 6063 T5 Al |
| 33 | 720210 | Weep Hole Cover | PVC |
| 34 | 720187 | Installation Screw Hole Plug | PVC |
| 37 | 720197 | Auto Lock | C Steel |
| 38 | 720199 | Sweep Lock | Cast Zinc |
| 39 | 720196 | Auto Lock Cover Assembly | Cast Zinc |
| 40 | | #6 x 1-1/8" Ph. FH SDS (Auto and Sweep Lock Screw) | SS |
| 41 | 720200 | Auto and Sweep Lock Keeper | Cast Zinc |
| 42 | 76X34PPA | #6 x 3/4" PH. PH SDS (Keeper Screw) | SS |
| 43 | 7612FPTX | #6 x 1/2" FPH Tek (Reinforcement Screw) | SS |
| 44 | | Leadstile Top Corner Key | Nylon |
| 45 | | Leadstile Bottom Corner Key | Nylon |
| 46 | | Lockstile Top Corner Key | Nylon |
| 47 | | Lockstile Bottom Corner Key | Nylon |
| 48 | 720204 | Wheel | Nylon |
| 72 | 620135 | Lami. I.G. Bead | PVC |
| 74 | | Backbedding, GE 7700 or Dow 791 or Dow 983 | Silicone |
| 75 | 71684/5 | Setting Block (7/8" x 2" x 1/8"), 85 +/- 5 duro. | EPDM |
| 80 | 61011 | Roll-formed Screen | Alum |
| 81 | 61012 | Extruded Screen Frame | Alum |
| 82 | | Extruded Screen Spreader Bar | Alum |
| 83 | 47042W | Screen Corner Key with Pull Ring | PVC |
| 84 | 47041W/CKGLB | Screen Corner Key No Pull Ring | PVC |
| 85 | 7CASPM | Tension Spring | SS |
| 86 | 61816C48 | Screen Cloth | Fiberglass |
| 87 | 61635/61614 | .140" Screen Spline (Machine/Hand Rolled) | Vinyl |

NOTES:
1) ITEMS # 5-12, 18, 35, 36, 49-71 & 73 ARE NOT USED AND ARE NOT PART OF THIS APPROVAL.
2) PVC BY ENERGI WINDOW AND DOOR PROFILES, LTD., TO BE LABELED FOR AAMA EXTRUDER CODE.

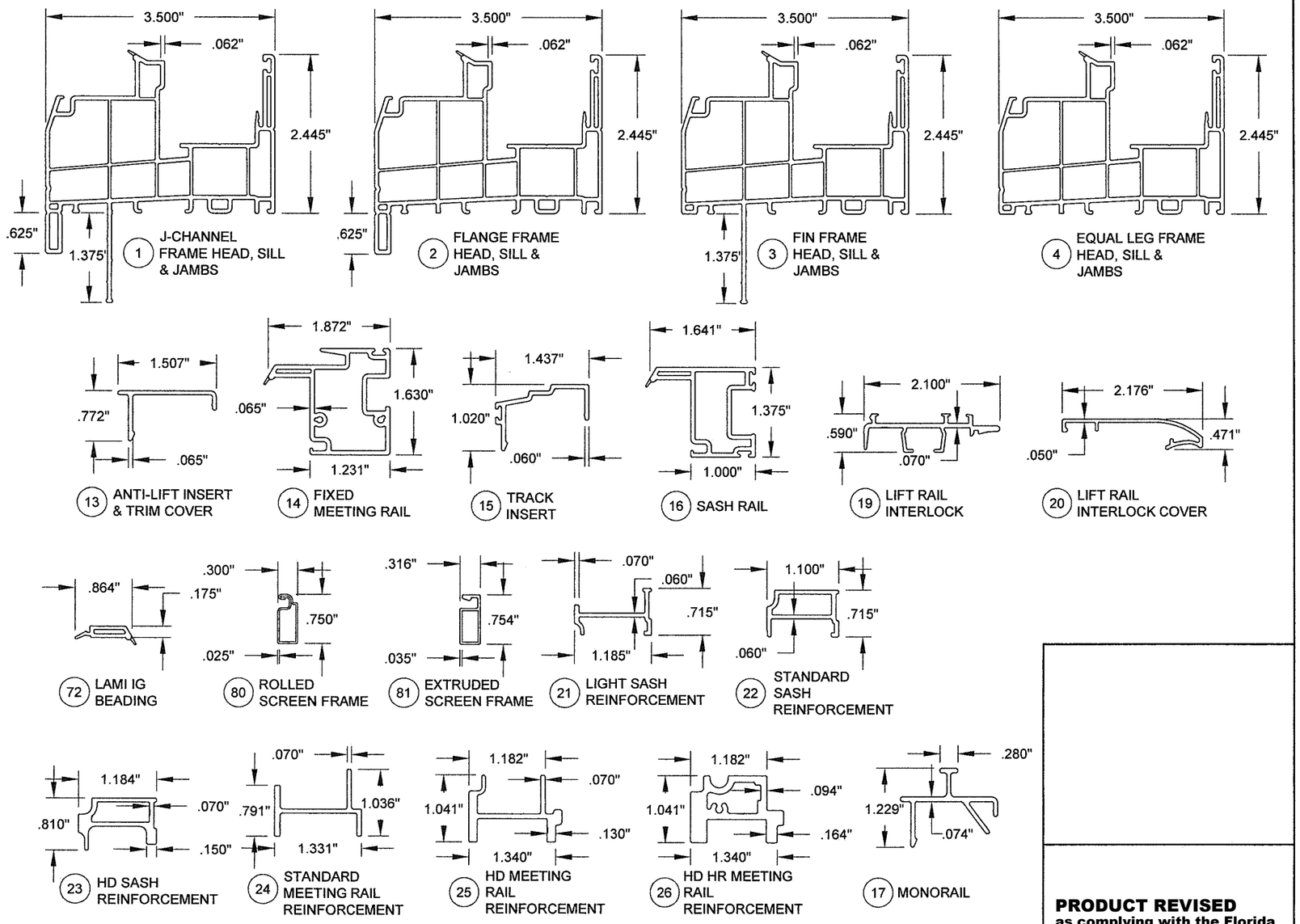


ANTHONY LYNN MILLER LICENSE No. 58705 STATE OF FLORIDA PROFESSIONAL ENGINEER
9/2/20
A. LYNN MILLER, P.E.
P.E.# 58705

PGT®
1070 TECHNOLOGY DRIVE
N. VENICE, FL 34275
(941)-480-1600
REGISTRATION #29296

**PRODUCT REVISED**
**as complying with the Florida Building Code**
**NOA-No.** 20-0406.01
**Expiration Date** 09/24/2025
**By**
**Miami-Dade Product Control**

*Revision:*
C) ADDED BACKBEDDING.
AK - 03/27/20

*Description:* WINDOW EXTRUSIONS & BOM
*Drawn By:* J ROSOWSKI
*Title:* HORIZONTAL ROLLER - LM
*Date:* 05/15/15
*Series/Model:* HR-5510
*Scale:* NTS
*Sheet:* 17 OF 18
*Drawing No.* MD-HR5510-01
*Rev:* C

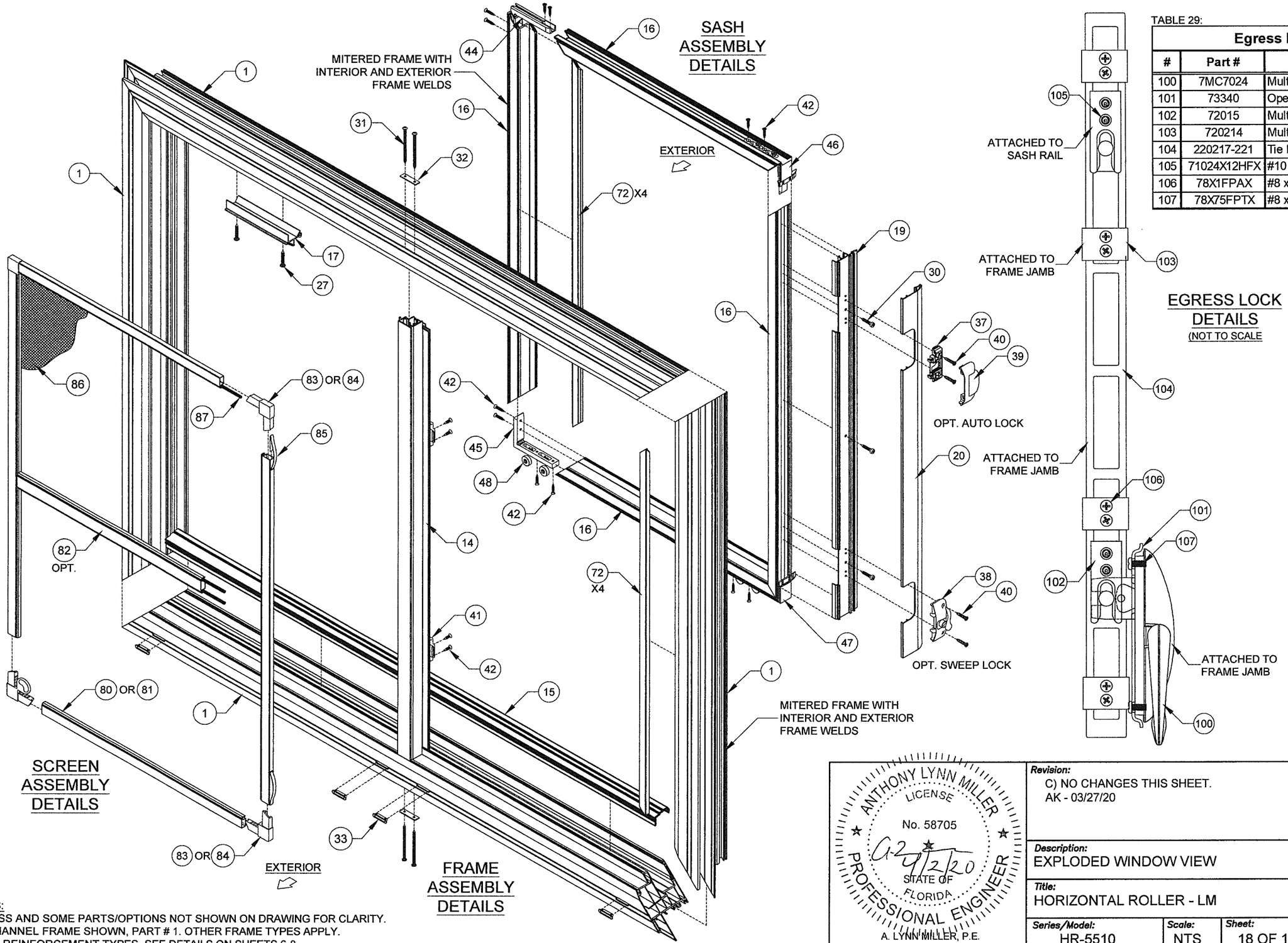


TABLE 29:

**Egress Lock Bill of Material**

| # | Part # | Description | Material |
|---|---|---|---|
| 100 | 7MC7024 | Multi-Point Lock Operator | Cast Zinc |
| 101 | 73340 | Operator mounting Plate | Steel |
| 102 | 72015 | Multipoint Lock Keeper | Aluminum |
| 103 | 720214 | Multipoint Lock Guide | Nylon |
| 104 | 220217-221 | Tie Bar (Length Varies) | Stainless Steel |
| 105 | 71024X12HFX | #10 x 1/2" HH MS | Stainless Steel |
| 106 | 78X1FPAX | #8 x 1" Ph. FH SMS | Stainless Steel |
| 107 | 78X75FPTX | #8 x 3/4" Ph. FH SDS | Stainless Steel |

NOTES:
1) GLASS AND SOME PARTS/OPTIONS NOT SHOWN ON DRAWING FOR CLARITY.
2) J-CHANNEL FRAME SHOWN, PART # 1. OTHER FRAME TYPES APPLY.
3) FOR REINFORCEMENT TYPES, SEE DETAILS ON SHEETS 6-8.

**PRODUCT REVISED**
**as complying with the Florida Building Code**
**NOA–No.** 20-0406.01
**Expiration Date** 09/24/2025
**By**
**Miami–Dade Product Control**

1070 TECHNOLOGY DRIVE
N. VENICE, FL 34275
(941)–480–1600

REGISTRATION #29296

ANTHONY LYNN MILLER LICENSE No. 58705 STATE OF FLORIDA PROFESSIONAL ENGINEER
A. LYNN MILLER, P.E.
P.E.# 58705
G-2 9/2/20

*Revision:*
C) NO CHANGES THIS SHEET.
AK - 03/27/20

| *Description:* | *Drawn By:* |
|---|---|
| EXPLODED WINDOW VIEW | J ROSOWSKI |

| *Title:* | *Date:* |
|---|---|
| HORIZONTAL ROLLER - LM | 05/15/15 |

| *Series/Model:* | *Scale:* | *Sheet:* | *Drawing No.* | *Rev:* |
|---|---|---|---|---|
| HR-5510 | NTS | 18 OF 18 | MD-HR5510-01 | C |

MIAMI-DADE COUNTY

DEPARTMENT OF REGULATORY AND ECONOMIC RESOURCES (RER)

**MIAMI–DADE** COUNTY, FLORIDA
**PRODUCT CONTROL SECTION**
11805 SW 26 Street, Room 208
Miami, Florida 33175-2474
www.miamidade.gov/building

# NOTICE OF ACCEPTANCE (NOA)

**PGT Industries, Inc.**
**1070 Technology Drive**
**North Venice, FL 34275**

## SCOPE:

This NOA is being issued under the applicable rules and regulations governing the use of construction materials. The documentation submitted has been reviewed and accepted by Miami-Dade County RER - Product Control Section to be used in Miami Dade County and other areas where allowed by the Authority Having Jurisdiction (AHJ).

This NOA shall not be valid after the expiration date stated below. The Miami-Dade County Product Control Section (In Miami-Dade County) and/or the AHJ (in areas other than Miami-Dade County) reserve the right to have this product or material tested for quality assurance purposes. If this product or material fails to perform in the accepted manner, the manufacturer will incur the expense of such testing and the AHJ may immediately revoke, modify, or suspend the use of such product or material within their jurisdiction. RER reserves the right to revoke this acceptance if it is determined by Miami–Dade County Product Control Section that this product or material fails to meet the requirements of the applicable building code.

This product is approved as described herein and has been designed to comply with the Florida Building Code, including the High Velocity Hurricane Zone.

**DESCRIPTION:** **Series "PW-5520 Vinyl" PVC Fixed Window – L.M.I.**

**APPROVAL DOCUMENT:** Drawing No. **MD-5520.0** titled "Vinyl Fixed Window NOA (LM&SM)", sheets 1 through 11 of 11, dated 09/09/14, with revision C dated 03/16/20, prepared by manufacturer, signed and sealed by Anthony Lynn Miller, P.E., bearing the Miami-Dade County Product Control Revision stamp with the Notice of Acceptance number and expiration date by the Miami-Dade County Product Control Section.

**MISSILE IMPACT RATING: Large and Small Missile Impact Resistant**

**LABELING:** Each unit shall bear a permanent label with the manufacturer's name or logo, city, state, model/series, and following statement: "Miami-Dade County Product Control Approved", unless otherwise noted herein.

**RENEWAL** of this NOA shall be considered after a renewal application has been filed and there has been no change in the applicable building code negatively affecting the performance of this product.

**TERMINATION** of this NOA will occur after the expiration date or if there has been a revision or change in the materials, use, and/or manufacture of the product or process. Misuse of this NOA as an endorsement of any product, for sales, advertising or any other purposes shall automatically terminate this NOA. Failure to comply with any section of this NOA shall be cause for termination and removal of NOA.

**ADVERTISEMENT:** The NOA number preceded by the words Miami-Dade County, Florida, and followed by the expiration date may be displayed in advertising literature. If any portion of the NOA is displayed, then it shall be done in its entirety.

**INSPECTION:** A copy of this entire NOA shall be provided to the user by the manufacturer or its distributors and shall be available for inspection at the job site at the request of the Building Official.

This NOA **revises NOA No. 19-1126.10** and consists of this page 1 and evidence pages E-1, E-2, E-3 and E-4, as well as approval document mentioned above.

The submitted documentation was reviewed by **Manuel Perez, P.E.**

MIAMI-DADE COUNTY APPROVED

7/30/20

**PGT Industries, Inc.**

## NOTICE OF ACCEPTANCE: EVIDENCE SUBMITTED

**1. EVIDENCE SUBMITTED UNDER PREVIOUS NOA's**

**A. DRAWINGS**

**1.** Manufacturer's die drawings and sections.
***(Submitted under NOA No. 14-0930.25)***

**2.** Drawing No. **MD-5520.0** titled "Vinyl Fixed Window NOA (LM&SM)", sheets 1 through 11 of 11, dated 09/09/14, with revision B dated 06/06/17, prepared by manufacturer, signed and sealed by Anthony Lynn Miller, P.E.
***(Submitted under NOA No. 17-0614.09)***

**B. TESTS**

**1.** Test reports on: 1) Uniform Static Air Pressure Test, Loading per FBC, TAS 202-94
2) Large Missile Impact Test per FBC, TAS 201-94
3) Cyclic Wind Pressure Loading per FBC, TAS 203-94
along with marked-up drawings and installation diagram of a PVC sliding glass door, a PVC fixed window and an aluminum sliding glass door, using: Kodispace 4SG TPS spacer system, Duraseal® spacer system, Super Spacer® NXT™ spacer system and XL Edge™ spacer system at insulated glass, prepared by Fenestration Testing Laboratory, Inc., Test Reports No. **FTL-8717, FTL-8968** and **FTL-8970**, dated 11/16/15, 06/07/16 and 06/02/16 respectively, all signed and sealed by Idalmis Ortega, P.E.
***(Submitted under NOA No. 16-0629.12)***

**2.** Test reports on: 1) Air Infiltration Test, per FBC, TAS 202-94
2) Uniform Static Air Pressure Test, Loading per FBC, TAS 202-94
3) Water Resistance Test, per FBC, TAS 202-94
4) Large Missile Impact Test per FBC, TAS 201-94
5) Cyclic Wind Pressure Loading per FBC, TAS 203-94
6) Forced Entry Test, per FBC 2411.3.2.1, and TAS 202-94
along with marked-up drawings and installation diagram of a PVC fixed window, prepared by Fenestration Testing Laboratory, Inc., Test Report No. **FTL-7897**, dated 08/01/14, signed and sealed by Idalmis Ortega, P.E.
***(Submitted under NOA No. 14-0930.25)***

**C. CALCULATIONS**

**1.** Anchor verification calculations and structural analysis, complying with **FBC 5th Edition (2014)**, dated 09/18/14 and 04/07/15, prepared by manufacturer, signed and sealed by Anthony Lynn Miller, P.E.
***(Submitted under NOA No. 14-0930.25)***

**2.** Glazing complies with **ASTM E1300-09**

**Manuel Perez, P.E.**
**Product Control Examiner**
**NOA No. 20-0401.16**
**Expiration Date: April 30, 2025**
**Approval Date: August 06, 2020**

## NOTICE OF ACCEPTANCE: EVIDENCE SUBMITTED

**D. QUALITY ASSURANCE**

**1.** Miami-Dade Department of Regulatory and Economic Resources (RER).

**E. MATERIAL CERTIFICATIONS**

**1.** Notice of Acceptance No. **19-0305.02** issued to **Kuraray America, Inc.** for their "**Trosifol® Ultraclear, Clear and Color PVB Glass Interlayers**" dated 05/09/19, expiring on 07/08/24.

**2.** Notice of Acceptance No. **17-0808.02** issued to **Kuraray America, Inc.** for their **"SentryGlas® (Clear and White) Glass Interlayers**" dated 12/28/17, expiring on 07/04/23**.**

**3.** Notice of Acceptance No. **18-0122.02,** issued to **ENERGI Fenestration Solutions USA, Inc.**, for their **White Rigid PVC Exterior Extrusions for Windows and Doors**, approved on 03/08/18, expiring on 02/28/23.

**4.** Notice of Acceptance No. **18-1217.15,** issued to **ENERGI Fenestration Solutions USA, Inc.**, for their **Bronze and Lighter Shades of Cap Coated Rigid PVC Exterior Extrusions for Windows and Doors**, approved on 01/17/19, expiring on 04/16/20.

**5.** Notice of Acceptance No. **18-1217.16,** issued to **ENERGI Fenestration Solutions USA, Inc.**, for their **Performance Core Rigid PVC Exterior Extrusions for Windows and Doors**, approved on 01/17/19, expiring on 02/04/21.

**F. STATEMENTS**

**1.** Statement letter of conformance, complying with **FBC 6th Edition (2017)**, dated November 22, 2019, issued by manufacturer, signed and sealed by Anthony Lynn Miller, P.E.
***(Submitted under NOA No. 19-1126.10***

**2.** Statement letter of no financial interest, dated November 22, 2019, issued by manufacturer, signed and sealed by Anthony Lynn Miller, P.E.
***(Submitted under NOA No. 19-1126.10***

**3.** Proposal issued by Product Control Section, dated 06/26/14, signed by Jaime Gascon, P.E. Supervisor, Product Control Section.
***(Submitted under NOA No. 14-0930.25)***

**4.** Proposal No. **16-0125** issued by the Product Control Section, dated March 09, 2016, signed by Ishaq Chanda, P.E.
***(Submitted under previous NOA No. 16-0629.12)***

**G. OTHERS**

**1.** Notice of Acceptance No. **17-0614.09**, issued to PGT Industries, Inc. for their Series "PW-5520 Vinyl" PVC Fixed Window – L.M.I. approved on 10/26/17 and expiring on 04/30/20.

Manuel Perez

**Manuel Perez, P.E.**
**Product Control Examiner**
**NOA No. 20-0401.16**
**Expiration Date: April 30, 2025**
**Approval Date: August 06, 2020**

## NOTICE OF ACCEPTANCE: EVIDENCE SUBMITTED

**2. NEW EVIDENCE SUBMITTED**

**A. DRAWINGS**

**1.** Drawing No. **MD-5520.0** titled "Vinyl Fixed Window NOA (LM&SM)", sheets 1 through 11 of 11, dated 09/09/14, with revision C dated 03/16/20, prepared by manufacturer, signed and sealed by Anthony Lynn Miller, P.E.

**B. TESTS**

**1.** Test reports on: 1) Air Infiltration Test, per FBC, TAS 202-94
2) Uniform Static Air Pressure Test, Loading per FBC, TAS 202-94
3) Water Resistance Test, per FBC, TAS 202-94
4) Large Missile Impact Test per FBC, TAS 201-94
5) Cyclic Wind Pressure Loading per FBC, TAS 203-94
6) Forced Entry Test, per ASTM F588 and TAS 202-94

along with marked-up drawings and installation diagram of all PGT Industries, Inc. representative units listed below and tested to qualify **Dowsil 791** and **Dowsil 983** silicones, prepared by Fenestration Testing Laboratory, Inc., Test Reports No.:
**FTL-7897,** PGT PW5520 PVC Fixed Window (unit 6 in proposal), dated 09/03/14
**FTL-20-2107.1,** PGT SGD780 Aluminum Sliding Glass Door (unit 7 in proposal)
**FTL-20-2107.2,** PGT CA740 Alum. Outswing Casement Window (unit 8 in proposal)
**FTL-20-2107.3,** PGT PW7620A Aluminum Fixed Window (unit 9 in proposal) and
**FTL-20-2107.4**, PGT PW7620A Aluminum Fixed Window (unit 10 in proposal) dated 07/13/20, all signed and sealed by Idalmis Ortega, P.E

**C. CALCULATIONS**

**1.** Anchor verification calculations and structural analysis, complying with **FBC 5th Edition (2014)**, dated 09/18/14, 04/07/15 and updated on 03/19/20 to the new **FBC 7th Edition (2020)**, prepared by manufacturer, signed and sealed by Anthony Lynn Miller, P.E.

**D. QUALITY ASSURANCE**

**1.** Miami-Dade Department of Regulatory and Economic Resources (RER)

**Manuel Perez, P.E.**
**Product Control Examiner**
**NOA No. 20-0401.16**
**Expiration Date: April 30, 2025**
**Approval Date: August 06, 2020**

## E. MATERIAL CERTIFICATIONS

1. Notice of Acceptance No. **19-0305.02** issued to **Kuraray America, Inc.** for their "**Trosifol® Ultraclear, Clear and Color PVB Glass Interlayers**" dated 05/09/19, expiring on 07/08/24.
2. Notice of Acceptance No. **18-0725.11** issued to **Kuraray America, Inc.** for their "**Kuraray SentryGlas® Xtra™ (SGX™) Clear Glass Interlayer**" dated 05/23/19, expiring on 05/23/24.
3. Notice of Acceptance No. **18-0122.02,** issued to **ENERGI Fenestration Solutions USA, Inc.**, for their **White Rigid PVC Exterior Extrusions for Windows and Doors**, approved on 03/08/18, expiring on 02/28/23.
4. Notice of Acceptance No. **18-1217.15,** issued to **ENERGI Fenestration Solutions USA, Inc.**, for their **Bronze and Lighter Shades of Cap Coated Rigid PVC Exterior Extrusions for Windows and Doors**, approved on 01/17/19, expiring on 04/16/20.
5. Notice of Acceptance No. **18-1217.16,** issued to **ENERGI Fenestration Solutions USA, Inc.**, for their **Performance Core Rigid PVC Exterior Extrusions for Windows and Doors**, approved on 01/17/19, expiring on 02/04/21.

## F. STATEMENTS

1. Statement letter of conformance, complying with **FBC 6th Edition (2017)** and the **FBC 7th Edition (2020)**, dated March 16, 2020, issued by manufacturer, signed and sealed by Anthony Lynn Miller, P.E.
2. Statement letter of no financial interest, dated March 16, 2020, issued by manufacturer, signed and sealed by Anthony Lynn Miller, P.E.
3. Proposal No. **19-1155 TP** issued by the Product Control Section, dated January 10, 2020, signed by Ishaq Chanda, P.E.

## G. OTHERS

1. Notice of Acceptance No. **19-1126.10**, issued to PGT Industries, Inc. for their Series "PW-5520 Vinyl" PVC Fixed Window – L.M.I. approved on 01/09/20 and expiring on 04/30/25.

Manuel Perez

**Manuel Perez, P.E.**
**Product Control Examiner**
**NOA No. 20-0401.16**
**Expiration Date: April 30, 2025**
**Approval Date: August 06, 2020**

## GENERAL NOTES: SERIES 5520
## IMPACT RESISTANT, VINYL FIXED WINDOW

1) THIS PRODUCT HAS BEEN DESIGNED & TESTED TO COMPLY WITH THE REQUIREMENTS OF THE FLORIDA BUILDING CODE, INCLUDING THE HIGH VELOCITY HURRICANE ZONE (HVHZ).

2) SHUTTERS ARE NOT REQUIRED WHEN USED IN WIND-BORNE DEBRIS REGIONS. FOR INSULATED GLASS INSTALLATIONS ABOVE 30' IN THE HVHZ, THE OUTBOARD LITE (CAP) MUST TEMPERED.

3) FOR MASONRY APPLICATIONS IN MIAMI-DADE COUNTY, USE ONLY MIAMI-DADE COUNTY APPROVED MASONRY ANCHORS. MATERIALS USED FOR ANCHOR EVALUATIONS WERE SOUTHERN PINE, ASTM C90 CONCRETE MASONRY UNITS AND CONCRETE WITH MIN. KSI PER ANCHOR TYPE.

4) ALL WOOD BUCKS LESS THAN 1-1/2" THICK ARE TO BE CONSIDERED 1X INSTALLATIONS. 1X WOOD BUCKS ARE OPTIONAL IF UNIT IS INSTALLED DIRECTLY TO SUBSTRATE. WOOD BUCKS DEPICTED AS 2X ARE 1-1/2" THICK OR GREATER. 1X AND 2X BUCKS (WHEN USED) SHALL BE DESIGNED TO PROPERLY TRANSFER LOADS TO THE STRUCTURE. WOOD BUCK DESIGN AND INSTALLATION IS THE RESPONSIBILITY OF THE ENGINEER, (EOR) OR ARCHITECT OF RECORD, (AOR).

5) ANCHOR EMBEDMENT TO BASE MATERIAL SHALL BE BEYOND WALL DRESSING OR STUCCO. USE ANCHORS OF SUFFICIENT LENGTH TO ACHIEVE EMBEDMENT. INSTALLATION ANCHORS SHOULD BE SEALED. OVERALL SEALING/FLASHING STRATEGY FOR WATER RESISTANCE OF INSTALLATION SHALL BE DONE BY OTHERS AND IS BEYOND THE SCOPE OF THESE INSTRUCTIONS.

6) MAX. 1/4" SHIMS ARE REQUIRED AT EACH ANCHOR LOCATION WHERE THE PRODUCT IS NOT FLUSH TO THE SUBSTRATE. USE SHIMS CAPABLE OF TRANSFERRING APPLIED LOADS. WOOD BUCKS, BY OTHERS, MUST BE SUFFICIENTLY ANCHORED TO RESIST LOADS IMPOSED ON THEM BY THE WINDOW.

7) DESIGN PRESSURES:
A. NEGATIVE DESIGN LOADS BASED ON STRUCTURAL/CYCLE TEST PRESSURE, FRAME ANALYSIS AND GLASS PER ASTM E1300.
B. POSITIVE DESIGN LOADS BASED ON WATER TEST PRESSURE, STRUCTURAL/ CYCLE TEST PRESSURE, FRAME ANALYSIS AND GLASS PER ASTM E1300.
C. DESIGN LOADS ARE BASED ON ALLOWABLE STRESS DESIGN, ASD.

8) THE ANCHORAGE METHODS SHOWN HAVE BEEN DESIGNED TO RESIST THE WINDLOADS CORRESPONDING TO THE REQUIRED DESIGN PRESSURE. THE 33-1/3% STRESS INCREASE HAS NOT BEEN USED IN THE DESIGN OF THIS PRODUCT. THE 1.6 LOAD DURATION FACTOR WAS USED FOR THE EVALUATION OF ANCHORS INTO WOOD. ANCHORS THAT COME INTO CONTACT WITH OTHER DISSIMILAR MATERIALS SHALL MEET THE REQUIREMENTS OF THE FLORIDA BUILDING CODE FOR CORROSION RESISTANCE.

9) METAL SUBSTRATE TO MEET MIN. STRENGTH AND THICKNESS REQUIREMENTS PER CURRENT FLORIDA BUILDING CODE AND TO BE REVIEWED BY THE AUTHORITY HAVING JURISDICTION.

10) REFERENCES: TEST REPORTS FTL-7897; ELCO ULTRACON NOA; DEWALT ULTRACON+ NOA; ELCO/DEWALT CRETEFLEX NOA; ELCO/DEWALT AGGRE-GATOR NOA; ENERGI WINDOW AND DOOR PROFILES, LTD WHITE & BRONZE/LIGHTER SHADES OF CAP COATED PVC EXTRUSION NOA'S; NATIONAL DESIGN SPECIFICATION FOR WOOD CONSTRUCTION, ANSI/AF&PA NDS & ALUMINUM DESIGN MANUAL

11) "PVB" = .090" TROSIFOL® PVB BY KURARAY AMERICA, INC.
"SG" = .090" SENTRYGLAS® INTERLAYER BY KURARAY AMERICA, INC.

| IMPACT RATING | DESIGN PRESSURE RATING |
|---|---|
| LARGE & SMALL MISSILE IMPACT RESISTANT | VARIES PER GLASS TYPE, SEE TABLES 4-13, SHEETS 6-10 |

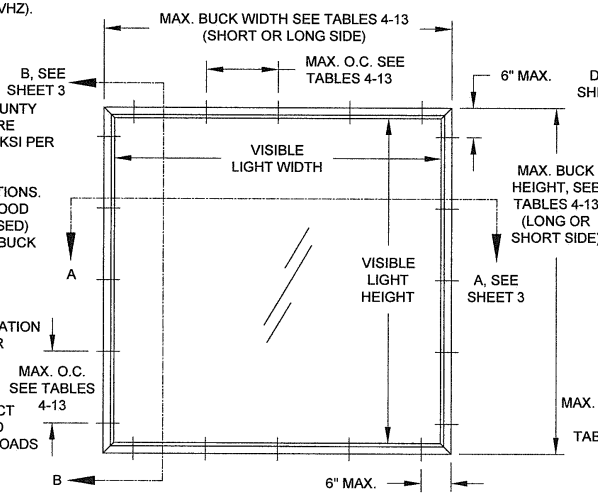


TYP. EQUAL-LEG/BOX & FLANGE FRAME (90° CORNERS)

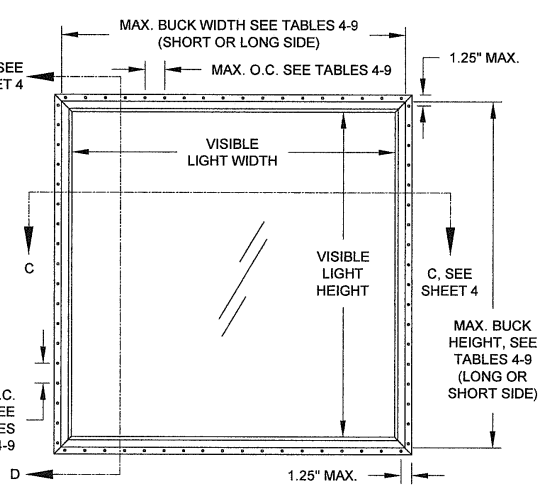


TYP. INTEGRAL FIN & J-CHANNEL FRAME (90° CORNERS) (ANCHORED THROUGH NAIL FIN)

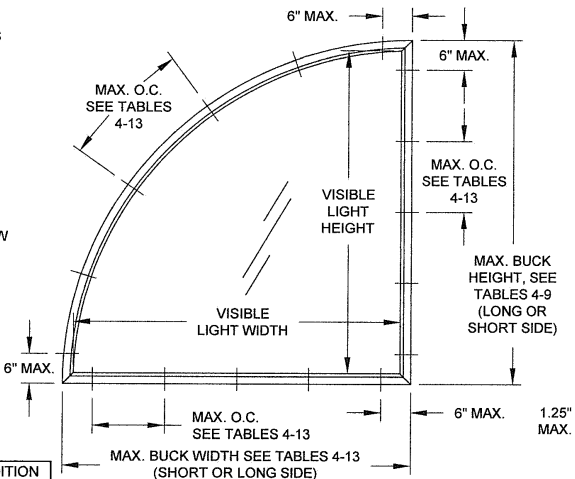


TYP. EQUAL-LEG/BOX & FLANGE FRAME (CURVED OR ANGLED CORNERS)

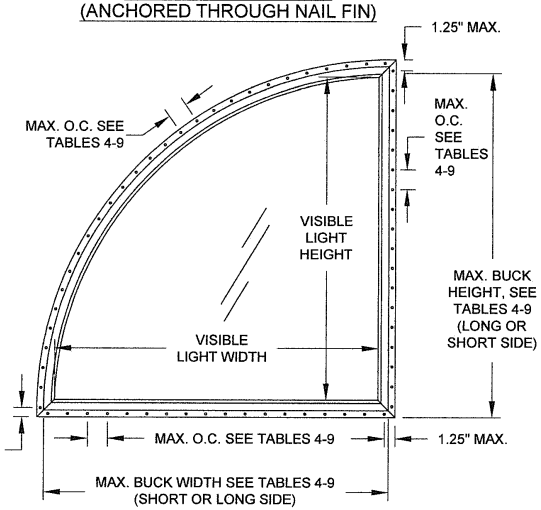


TYP. INTEGRAL FIN & J-CHANNEL FRAME (CURVED OR ANGLED CORNERS) (ANCHORED THROUGH NAIL FIN)


| | |
|---|---|
| GENERAL NOTES | 1 |
| ELEVATIONS | 1 |
| FRAME, GLASS & ANCHOR OPTIONS | 2 |
| INSTALLATION, FLANGE & EQUAL LEG | 3 |
| INSTALLATION, INTEGRAL FIN & J-CHANNEL | 4 |
| GLAZING DETAILS | 5 |
| DESIGN PRESSURES | 6-10 |
| BOM & ASSEMBLY | 11 |


### VISIBLE LIGHT FORMULAS
WIDTH: BUCK WIDTH - 4-3/16"
HEIGHT: BUCK HEIGHT - 4-3/16"

CODES / STANDARDS USED:
- 2020 FLORIDA BUILDING CODE (FBC), 7TH EDITION
- 2017 FLORIDA BUILDING CODE (FBC), 6TH EDITION
- ASTM E1300-09
- ANSI/AF&PA NDS-2018 FOR WOOD CONSTRUCTION
- ALUMINUM DESIGN MANUAL, ADM-2015
- AISI S100-16
- AISC 360-16

**PRODUCT REVISED**
**as complying with the Florida Building Code**
**NOA No. 20-0401.16**
**Expiration Date: 04/30/2025**
**By:** Manuel Perez
**Miami-Dade Product Control**

Revision:
C) UPDATED TO FBC 2020, REVISED ANCHOR TYPE TABLE.
AK - 03/16/20


1070 TECHNOLOGY DRIVE
N. VENICE, FL 34275
(941)-480-1600
REGISTRATION #29296


| Title | Desc. | Series | Sheet | Scale | DWG No. | Drawn By | Date | Rev. |
|---|---|---|---|---|---|---|---|---|
| VINYL FIXED WINDOW NOA (LM&SM) | GENERAL NOTES & ELEVATION | PW-5520 | 1 OF 11 | NTS | MD-5520.0 | J ROSOWSKI | 9/9/14 | C |

ANTHONY LYNN MILLER
LICENSE
No. 58705
STATE OF FLORIDA
PROFESSIONAL ENGINEER
3/19/20
A. LYNN MILLER, P.E.
P.E.# 58705

TABLE 1:

| Glass Type | Description | Table # |
|---|---|---|
| 7 | 7/8" Laminated l.G.: 1/8" A Exterior Cap + 7/16" Air Space + 5/16" Laminated; (2) Lites of 1/8" A Glass with .090" PVB Interlayer | 4 |
| 8 | 7/8" Laminated l.G.: 1/8" T Exterior Cap + 7/16" Air Space + 5/16" Laminated; (2) Lites of 1/8" A Glass with .090" PVB Interlayer | 5 |
| 9 | 7/8" Laminated l.G.: 3/16" A Exterior Cap + 3/8" Air Space + 5/16" Laminated; (2) Lites of 1/8" A Glass with .090" PVB Interlayer | 6 |
| 10 | 7/8" Laminated l.G.: 3/16" T Exterior Cap + 3/8" Air Space + 5/16" Laminated; (2) Lites of 1/8" A Glass with .090" PVB Interlayer | 6 |
| 11 | 1" Laminated l.G.: 1/8" T Exterior Cap + 7/16" Air Space + 7/16" Laminated; (2) Lites of 3/16" A Glass with .090" PVB Interlayer | 7 |
| 12 | 1" Laminated l.G.: 3/16" A Exterior Cap + 3/8" Air Space + 7/16" Laminated; (2) Lites of 3/16" A Glass with .090" PVB Interlayer | 8 |
| 13 | 1" Laminated l.G.: 3/16" T Exterior Cap + 3/8" Air Space + 7/16" Laminated; (2) Lites of 3/16" A Glass with .090" PVB Interlayer | 9 |
| 14 | 1" Laminated l.G.: 3/16" A Exterior Cap + 3/8" Air Space + 7/16" Laminated; (2) Lites of 3/16" A Glass with .090" SG Interlayer | 10 |
| 15 | 1" Laminated l.G.: 3/16" T Exterior Cap + 3/8" Air Space + 7/16" Laminated; (2) Lites of 3/16" A Glass with .090" SG Interlayer | 11 |
| 16 | 1" Laminated l.G.: 1/8" T Exterior Cap + 7/16" Air Space + 7/16" Laminated; (2) Lites of 3/16" H Glass with .090" SG Interlayer | 12 |
| 17 | 1" Laminated l.G.: 3/16" T Exterior Cap + 3/8" Air Space + 7/16" Laminated; (2) Lites of 3/16" H Glass with .090" SG Interlayer | 13 |

"A" = ANNEALED
"H" = HEAT STRENGTHENED
"T" = TEMPERED
"PVB" = .090" TROSIFOL® PVB BY KURARAY AMERICA, INC.
"SG" = .090" SENTRYGLAS® INTERLAYER BY KURARAY AMERICA, INC.

GLASS TYPES 14 THROUGH 17 MAY NOT BE USED WITH J-CHANNEL OR INTEGRAL FIN FRAMES.

WINDOW FRAMES MAY BE ANY OF THOSE SHOWN BELOW:

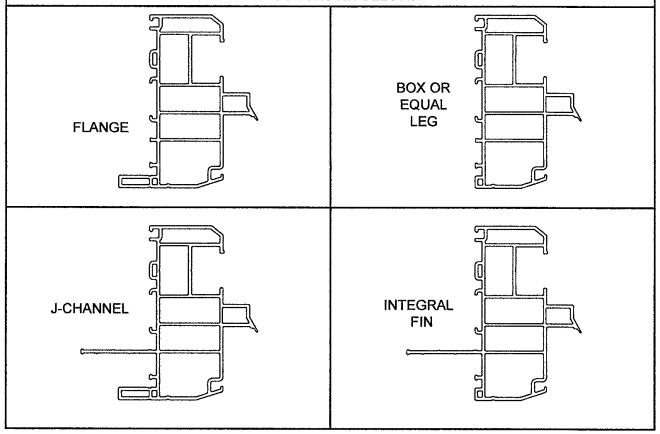


TABLE 2: ANCHORS INSTALLED THROUGH FRAME

| Group | Anchor | Substrate | Min. Edge Distance | Min. Embedment* |
|---|---|---|---|---|
| A | #10 SMS (steel, 18-8 S.S. or 410 S.S.) | P.T. Southern Pine (SG=0.55) | 7/16" | 1-3/8" |
| | | Steel, A36* | 3/8" | 0.050" |
| | | Steel Stud, A653 Gr. 33* | 3/8" | 0.0451" (18 Ga.) |
| | | Aluminum, 6063-T5* | 3/8" | 0.050" |
| | 3/16" steel Ultracon or Ultracon+ | P.T. Southern Pine (SG=0.55) | 7/16" | 1-3/8" |
| | | Concrete (min. 3 ksi) | 1" | 1-3/8" |
| | 3/16" steel Ultracon | Ungrouted CMU, (ASTM C-90) | 2-1/2" | 1-1/4" |
| | 3/16" steel Ultracon+ | Ungrouted CMU, (ASTM C-90) | 1" | 1-1/4" |
| B | #12 SMS (steel, 18-8 S.S. or 410 S.S.) | P.T. Southern Pine (SG=0.55) | 9/16" | 1-3/8" |
| | | Steel, A36* | 3/8" | 0.050" |
| | | Steel Stud, A653 Gr. 33* | 3/8" | 0.0451" (18 Ga.) |
| | | Aluminum, 6063-T5* | 3/8" | 0.063" |
| | 1/4" steel Ultracon or Ultracon+ | P.T. Southern Pine (SG=0.55) | 1" | 1-3/8" |
| | 1/4" steel Creteflex | P.T. Southern Pine (SG=0.55) | 1" | 1-3/8" |
| | 1/4" steel Aggre-Gator | P.T. Southern Pine (SG=0.55) | 1" | 1-3/8" |
| C | 1/4" steel Ultracon | Concrete (min. 2.85 ksi) | 1" | 1-3/4" |
| | | Ungrouted CMU, (ASTM C-90) | 2-1/2" | 1-1/4" |
| | 1/4" steel Ultracon+ | Concrete (min. 3 ksi) | 1-3/16" | 1-3/4" |
| | | Ungrouted CMU, (ASTM C-90) | 1" | 1-1/4" |
| | 1/4" steel Creteflex | Concrete (min. 3.35 ksi) | 1" | 1-3/4" |
| D | 1/4" steel Ultracon | Concrete (min. 2.85 ksi) | 2-1/2" | 1-3/4" |
| | 1/4" steel Ultracon+ | Concrete (min. 3 ksi) | 2-1/2" | 1-3/4" |
| | 1/4" steel Ultracon+ | Ungrouted CMU, (ASTM C-90) | 2-1/2" | 1-1/4" |
| | 1/4" steel Creteflex | Concrete (min. 3.35 ksi) | 2-1/2" | 1-3/4" |
| | | Ungrouted CMU, (ASTM C-90) | 2-1/2" | 1-1/4" |
| | 1/4" steel Aggre-Gator | Concrete (min. 3.275 ksi) | 1-1/2" | 1-3/8" |
| | | Grouted CMU, (ASTM C-90) | 2" | 2" |

* MIN. OF 3 THREADS BEYOND THE METAL SUBSTRATE.

"UNGROUTED CMU" VALUES MAY BE USED FOR GROUTED CMU APPLICATIONS.

ALL ARCHITECTURAL WINDOW SHAPES QUALIFIED, COMMON EXAMPLES SHOWN. INSCRIBE THE SHAPE IN A BLOCK (SEE EXAMPLES BELOW), AND OBTAIN DESIGN PRESSURES FOR THAT BLOCK SIZE FROM DESIGN PRESSURE TABLES 4-13, SHEETS 6-10.

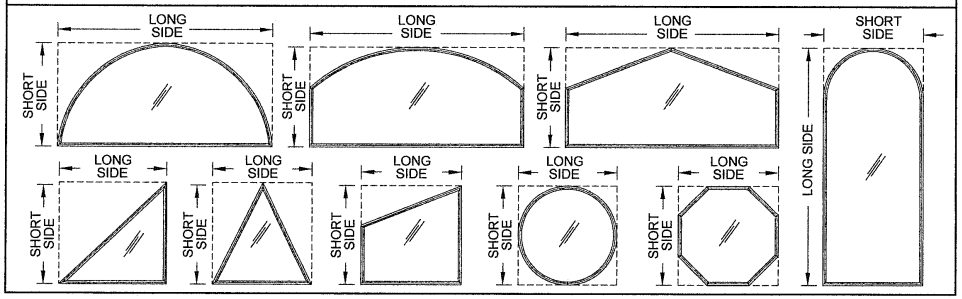


TABLE 3: ANCHORS INSTALLED THROUGH INTEGRAL FIN

| Group | Anchor | Substrate | Min. Edge Distance | Min. Embedment* |
|---|---|---|---|---|
| E | 2-1/2" x .131" Common Nail | P.T. Southern Pine (SG=.55) | 3/8" | 2-7/16" |
| F | 2-1/2" Ring-shank Roofing Nail | P.T. Southern Pine (SG=.55) | 3/8" | 2-7/16" |
| | #10 Trusshead SMS (steel, 18-8 S.S. or 410 S.S.) | P.T. Southern Pine (SG=.55) | 1/2" | 1-3/8" |
| | | Aluminum, 6063-T5* | 3/8" | 0.050" |
| | | Steel Stud, Gr. 33* | 3/8" | 0.0451" (18 Ga.) |
| | | Steel, A36* | 3/8" | 0.050" |
| | #12 SMS (steel, 18-8 S.S. or 410 S.S.) | P.T. Southern Pine (SG=.55) | 9/16" | 1-3/8" |
| | | Aluminum, 6063-T5* | 3/8" | 0.063" |
| | | Steel Stud, Gr. 33* | 3/8" | 0.050" |
| | | Steel, A36* | 3/8" | 0.050" |

* MIN. OF 3 THREADS BEYOND THE METAL SUBSTRATE.

| Material | Min. $F_y$ | Min. $F_u$ |
|---|---|---|
| Steel Screw | 92 ksi | 120 ksi |
| 18-8 Screw | 60 ksi | 95 ksi |
| 410 Screw | 90 ksi | 110 ksi |
| Elco/DeWalt Aggre-Gator® | 57 ksi | 96 ksi |
| Elco UltraCon® | 155 ksi | 177 ksi |
| 3/16" DeWalt UltraCon+® | 117 ksi | 164 ksi |
| 1/4" DeWalt UltraCon+® | 148 ksi | 164 ksi |
| 410 SS Elco/Dewalt CreteFlex® | 127.4 ksi | 189.7 ksi |
| 6063-T5 Aluminum | 16 ksi | 22 ksi |
| A36 Steel | 36 ksi | 58 ksi |
| Gr. 33 Steel Stud | 33 ksi | 45 ksi |

**PRODUCT REVISED**
**as complying with the Florida Building Code**
**NOA No. 20-0401.16**
**Expiration Date: 04/30/2025**
**By:** Manuel Perez
**Miami-Dade Product Control**

Revision
C) REVISED ANCHOR TYPE TABLE.
AK - 03/16/20


PGT® REGISTRATION #29296
1070 TECHNOLOGY DRIVE
N. VENICE, FL 34275
(941)-480-1600


| | | | | | |
|---|---|---|---|---|---|
| Title | VINYL FIXED WINDOW NOA (LM&SM) | | | Date | 9/9/14 |
| Desc. | GLASS/ANCHORS/FRAME OPTIONS | | | Drawn By | J ROSOWSKI |
| Series | PW-5520 | Scale | NTS | Sheet | 2 OF 11 |
| DWG No. | MD-5520.0 | Rev. | C | | |

ANTHONY LYNN MILLER LICENSE No. 58705 STATE OF FLORIDA PROFESSIONAL ENGINEER
3/19/20
A. LYNN MILLER, P.E.
P.E.# 58705

# INSTALLATION DETAILS FOR FLANGE & EQUAL-LEG/BOX FRAMES

## INSTALLATION OPTION 1
ANCHORED THROUGH FRAME INTO 2X WOOD FRAME OR BUCKSTRIP. SEE NOTE 2, THIS SHEET.

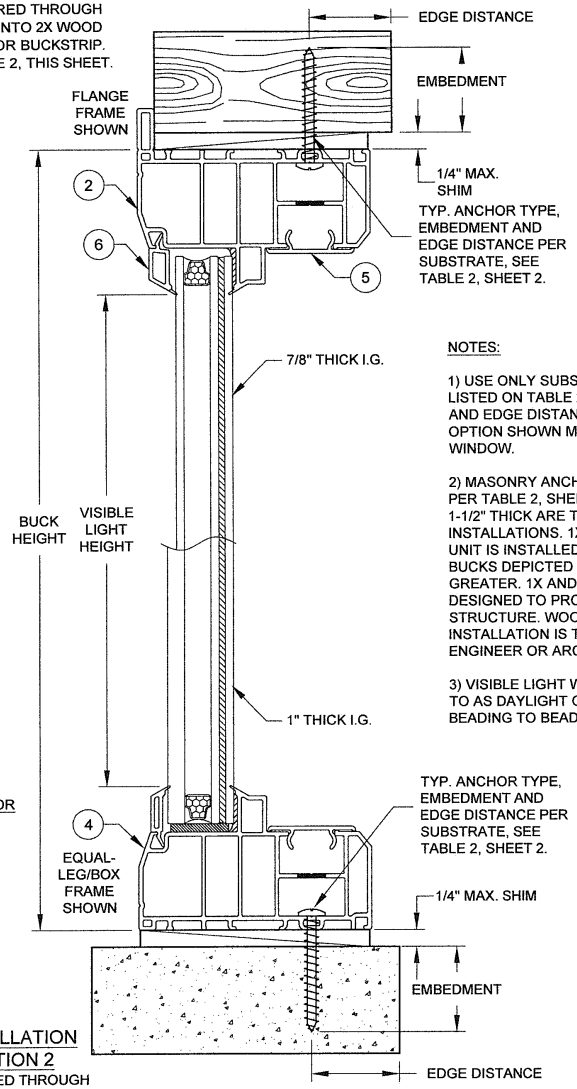


## INSTALLATION OPTION 2
ANCHORED THROUGH FRAME DIRECTLY INTO CONCRETE/CMU.

## INSTALLATION OPTION 3
ANCHORED THROUGH FRAME AND 1X BUCKSTRIP INTO CONCRETE/CMU. SEE NOTE 2, THIS SHEET.

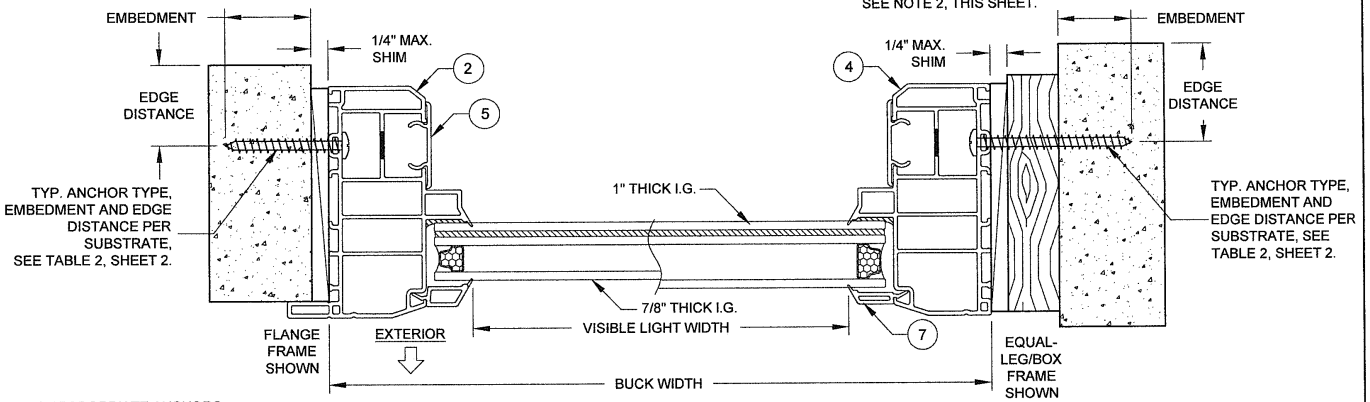


## HORIZONTAL SECTION A-A

NOTES:

1) USE ONLY SUBSTRATE-APPROPRIATE ANCHORS LISTED ON TABLE 2, SHEET 2. FOLLOW EMBEDMENT AND EDGE DISTANCE LIMITS. ANY INSTALLATION OPTION SHOWN MAY BE USED ON ANY SIDE OF THE WINDOW.

2) MASONRY ANCHORS MAY BE USED INTO WOOD AS PER TABLE 2, SHEET 2. ALL WOOD BUCKS LESS THAN 1-1/2" THICK ARE TO BE CONSIDERED 1X INSTALLATIONS. 1X WOOD BUCKS ARE OPTIONAL IF UNIT IS INSTALLED DIRECTLY TO SUBSTRATE. WOOD BUCKS DEPICTED AS 2X ARE 1-1/2" THICK OR GREATER. 1X AND 2X BUCKS (WHEN USED) SHALL BE DESIGNED TO PROPERLY TRANSFER LOADS TO THE STRUCTURE. WOOD BUCK DESIGN AND INSTALLATION IS THE RESPONSIBILITY OF THE ENGINEER OR ARCHITECT OF RECORD.

3) VISIBLE LIGHT WIDTH OR HEIGHT (ALSO REFERRED TO AS DAYLIGHT OPENING) IS MEASURED FROM BEADING TO BEADING.

DADE APPROVED MULLION, FBC COMPLIANT ALUMINUM/STEEL FRAMING OR STEEL STUD. MAY BE VERTICAL OR HORIZONTAL. SEE SUBSTRATE PROPERTIES, TABLE 3, SHEET 2.

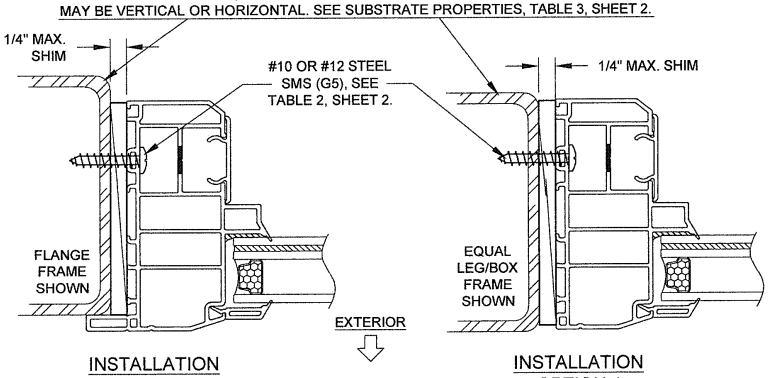


## INSTALLATION OPTION 4
ANCHORED THROUGH FRAME INTO METAL

## INSTALLATION OPTION 4
ANCHORED THROUGH FRAME INTO METAL

## INSTALLATION OPTION 2
ANCHORED THROUGH FRAME DIRECTLY INTO CONCRETE/CMU.

## VERTICAL SECTION B-B

| VISIBLE LIGHT FORMULAS |
|---|
| WIDTH: BUCK WIDTH - 4-3/16" |
| HEIGHT: BUCK HEIGHT - 4-3/16" |

**PRODUCT REVISED**
as complying with the Florida Building Code
NOA–No. 20-0401.16
Expiration Date: 04/30/2025
By: Manuel Perez
Miami–Dade Product Control

Revision
C) NO CHANGES THIS SHEET.
AK - 03/16/20


PGT®
REGISTRATION #29296
1070 TECHNOLOGY DRIVE
N. VENICE, FL 34275
(941)-480-1600


| | | | | | | | |
|---|---|---|---|---|---|---|---|
| Title | VINYL FIXED WINDOW NOA (LM&SM) | | | | | Date | 9/9/14 |
| Desc. | FLANGE & EQUAL-LEG/BOX FRAMES | | | | | Drawn By | J ROSOWSKI |
| Series | PW-5520 | Scale | NTS | Sheet | 3 OF 11 | DWG No. | MD-5520.0 Rev. C |

ANTHONY LYNN MILLER LICENSE No. 58705 STATE OF FLORIDA PROFESSIONAL ENGINEER
3/19/20
A. LYNN MILLER, P.E.
P.E.# 58705

# INSTALLATION DETAILS FOR INTEGRAL FIN & J-CHANNEL FRAMES

## INSTALLATION OPTION 5

ANCHORED THROUGH INTEGRAL FIN INTO 2X WOOD FRAME OR BUCKSTRIP. SEE NOTE 2, THIS SHEET.

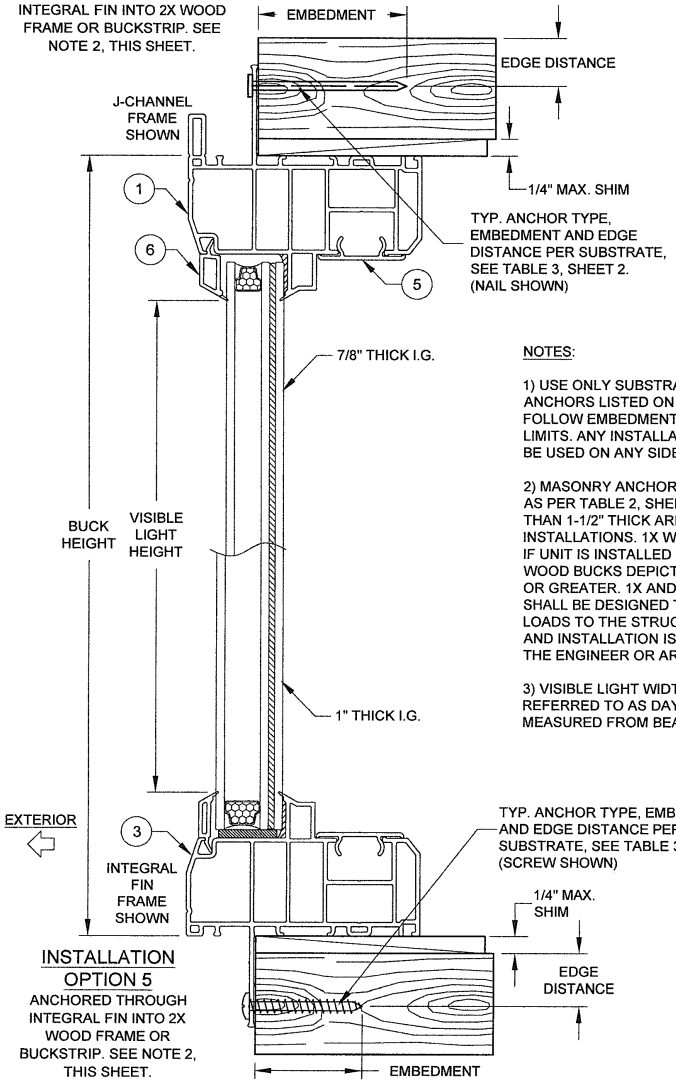


## INSTALLATION OPTION 5

ANCHORED THROUGH INTEGRAL FIN INTO 2X WOOD FRAME OR BUCKSTRIP. SEE NOTE 2, THIS SHEET.

## VERTICAL SECTION D-D

NOTES:

1) USE ONLY SUBSTRATE-APPROPRIATE ANCHORS LISTED ON TABLES 2 & 3, SHEET 2. FOLLOW EMBEDMENT AND EDGE DISTANCE LIMITS. ANY INSTALLATION OPTION SHOWN MAY BE USED ON ANY SIDE OF THE WINDOW.

2) MASONRY ANCHORS MAY BE USED INTO WOOD AS PER TABLE 2, SHEET 2. ALL WOOD BUCKS LESS THAN 1-1/2" THICK ARE TO BE CONSIDERED 1X INSTALLATIONS. 1X WOOD BUCKS ARE OPTIONAL IF UNIT IS INSTALLED DIRECTLY TO SUBSTRATE. WOOD BUCKS DEPICTED AS 2X ARE 1-1/2" THICK OR GREATER. 1X AND 2X BUCKS (WHEN USED) SHALL BE DESIGNED TO PROPERLY TRANSFER LOADS TO THE STRUCTURE. WOOD BUCK DESIGN AND INSTALLATION IS THE RESPONSIBILITY OF THE ENGINEER OR ARCHITECT OF RECORD.

3) VISIBLE LIGHT WIDTH OR HEIGHT (ALSO REFERRED TO AS DAYLIGHT OPENING) IS MEASURED FROM BEADING TO BEADING.

## INSTALLATION OPTION 6

ANCHORED THROUGH FRAME INTO 2X WOOD FRAME OR BUCKSTRIP. SEE NOTE 2, THIS SHEET. (MAY BE INSTALLED INTO CONCRETE, SIMILAR TO INSTALLATION OPTIONS 2 & 3)

## INSTALLATION OPTION 5

ANCHORED THROUGH INTEGRAL FIN INTO 2X WOOD FRAME OR BUCKSTRIP. SEE NOTE 2, THIS SHEET.

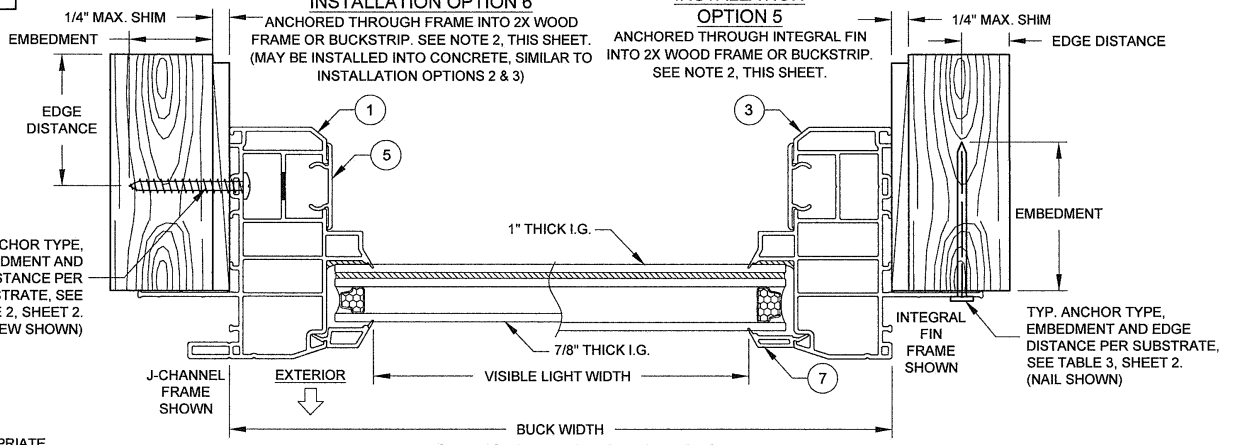


## HORIZONTAL SECTION C-C

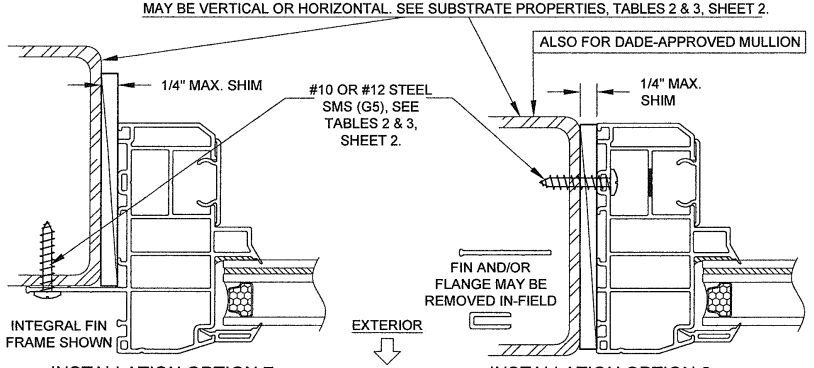


## INSTALLATION OPTION 7

INSTALLATION THROUGH THE INTEGRAL FIN, INTO METAL, SEE TABLE 3, SHEET 2.

## INSTALLATION OPTION 8

INSTALLATION THROUGH THE FRAME, INTO METAL, SEE TABLE 2, SHEET 2.

### VISIBLE LIGHT FORMULAS

WIDTH: BUCK WIDTH - 4-3/16"
HEIGHT: BUCK HEIGHT - 4-3/16"

**PRODUCT REVISED**
**as complying with the Florida Building Code**
**NOA–No. 20-0401.16**
**Expiration Date: 04/30/2025**
**By:** Manuel Perez
**Miami–Dade Product Control**

Revision
C) DADE MULLION NOTE, INSTALL. OPTION 6 NOTE. AK - 03/16/20


PGT® REGISTRATION #29296
1070 TECHNOLOGY DRIVE
N. VENICE, FL 34275
(941)-480-1600


| | | | | | |
|---|---|---|---|---|---|
| Title | VINYL FIXED WINDOW NOA (LM&SM) | | | Date | 9/9/14 |
| Desc. | J-CHANNEL & INTEGRAL FIN FRAMES | | | Drawn By | J ROSOWSKI |
| Series | PW-5520 | Scale | NTS | Sheet | 4 OF 11 |
| DWG No. | MD-5520.0 | Rev. | C | | |

ANTHONY LYNN MILLER LICENSE No. 58705 STATE OF FLORIDA PROFESSIONAL ENGINEER
3/19/20
A. LYNN MILLER, P.E.
P.E.# 58705

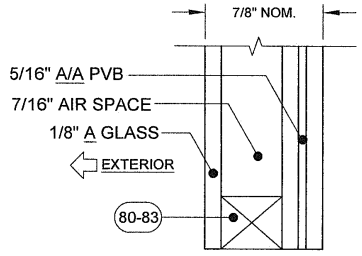


GLASS TYPE 7

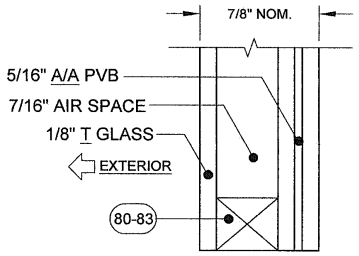


GLASS TYPE 8

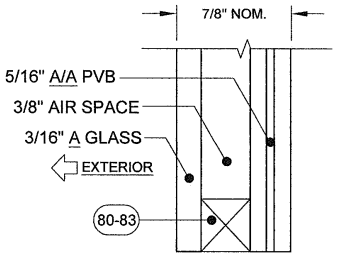


GLASS TYPE 9

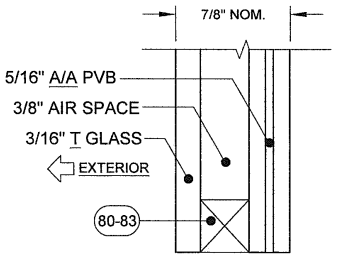


GLASS TYPE 10

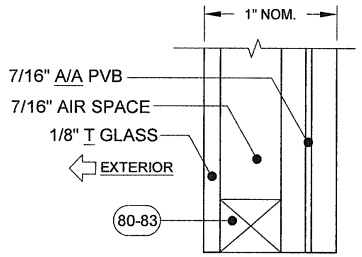


GLASS TYPE 11

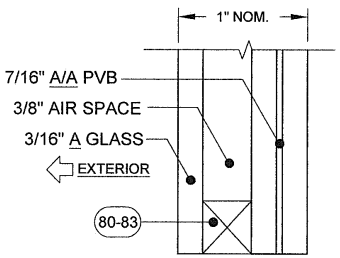


GLASS TYPE 12

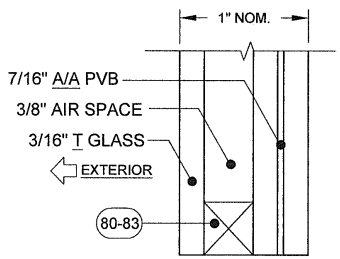


GLASS TYPE 13

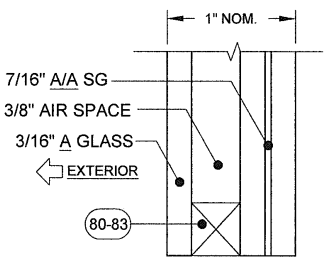


GLASS TYPE 14

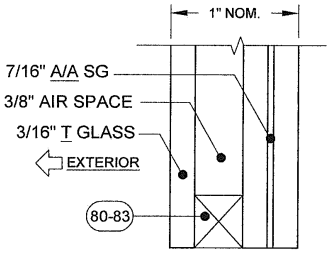


GLASS TYPE 15

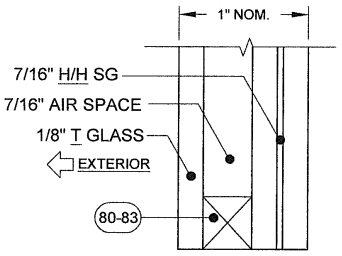


GLASS TYPE 16

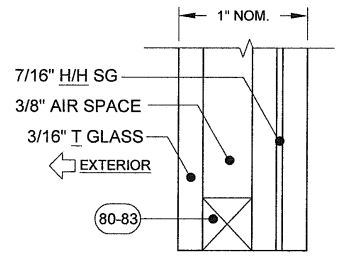


GLASS TYPE 17

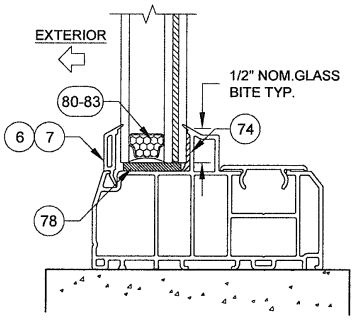


TYP. GLAZING DETAIL

"A" = ANNEALED
"H" = HEAT STRENGTHENED
"T" = TEMPERED
"PVB" = .090" TROSIFOL®
PVB BY KURARAY AMERICA, INC.
"SG" = .090" SENTRYGLAS®
INTERLAYER BY KURARAY AMERICA, INC.

GLASS TYPES 14 THROUGH 17 MAY NOT BE USED WITH J-CHANNEL OR INTEGRAL FIN FRAMES

**PRODUCT REVISED**
**as complying with the Florida Building Code**
**NOA No. 20-0401.16**
**Expiration Date: 04/30/2025**
**By:** Manuel Perez
**Miami-Dade Product Control**

Revision:
C) NO CHANGES THIS SHEET.
AK - 03/16/20


1070 TECHNOLOGY DRIVE
N. VENICE, FL 34275
(941)-480-1600

PGT® REGISTRATION #29296


| Series | Title | Date | Rev. |
|---|---|---|---|
| PW-5520 | VINYL FIXED WINDOW NOA (LM&SM) | 9/9/14 | C |

| Desc. | Drawn By | DWG No. |
|---|---|---|
| GLAZING DETAILS | J ROSOWSKI | MD-5520.0 |

| Scale | Sheet |
|---|---|
| NTS | 5 OF 11 |

ANTHONY LYNN MILLER
LICENSE
No. 58705
STATE OF FLORIDA
PROFESSIONAL ENGINEER
3/19/20

A. LYNN MILLER, P.E.
P.E.# 58705

TABLE 4:

| Window Design Pressure, (+/- psf) | | | | | | | | | | | | Use this table for Glass Type: | 7 |
|---|---|---|---|---|---|---|---|---|---|---|---|---|---|
| 1/8" A Cap - Airspace - 5/16" A/A with PVB | | | | | | | | | | | | | |
| Window Dimensions | | Long Side (in) | | | | | | | | | | | |
| | | 51.05 | 54 | 56 | 58 | 62 | 64 | 68 | 72 | 76 | 80 | 84 | 87 |
| Short Side (in) | 18 | +/-50 | +/-50 | +/-50 | +/-50 | +/-50 | +/-50 | +/-50 | +/-50 | +/-50 | +/-50 | +/-50 | +/-50 |
| | 20 | +/-50 | +/-50 | +/-50 | +/-50 | +/-50 | +/-50 | +/-50 | +/-50 | +/-50 | +/-50 | +/-50 | +/-50 |
| | 22 | +/-50 | +/-50 | +/-50 | +/-50 | +/-50 | +/-50 | +/-50 | +/-50 | +/-50 | +/-50 | +/-50 | +/-50 |
| | 24 | +/-50 | +/-50 | +/-50 | +/-50 | +/-50 | +/-50 | +/-50 | +/-50 | +/-50 | +/-50 | +/-50 | +/-50 |
| | 26 | +/-50 | +/-50 | +/-50 | +/-50 | +/-50 | +/-50 | +/-50 | +/-50 | +/-50 | +/-50 | +/-50 | +/-50 |
| | 28 | +/-50 | +/-50 | +/-50 | +/-50 | +/-50 | +/-50 | +/-50 | +/-50 | +/-50 | +/-50 | +/-50 | +/-50 |
| | 30 | +/-50 | +/-50 | +/-50 | +/-50 | +/-50 | +/-50 | +/-50 | +/-50 | +/-50 | +/-50 | +/-50 | |
| | 32 | +/-50 | +/-50 | +/-50 | +/-50 | +/-50 | +/-50 | +/-50 | +/-50 | +/-50 | +/-50 | | |
| | 34 | +/-50 | +/-50 | +/-50 | +/-50 | +/-50 | +/-50 | +/-50 | +/-50 | +/-50 | | | |
| | 36 | +/-50 | +/-50 | +/-50 | +/-50 | +/-50 | +/-50 | +/-50 | +/-50 | | | | |
| | 38 | +/-50 | +/-50 | +/-50 | +/-50 | +/-50 | +/-50 | +/-50 | | | | | |
| | 40 | +/-50 | +/-50 | +/-50 | +/-50 | +/-50 | +/-50 | | | | | | |
| | 42 | +/-50 | +/-50 | +/-50 | +/-50 | +/-50 | | | | | | | |
| | 44 | +/-50 | +/-50 | +/-50 | +/-50 | | | | | | | | |
| | 46 | +/-50 | +/-50 | +/-50 | | | | | | | | | |
| | 48 | +/-50 | +/-50 | | | | | | | | | | |
| | 51.05 | +/-50 | | | | | | | | | | | |

| MAX. O.C. SPACING IF ANCHORING THROUGH THE FRAME PER SHEETS 3 & 4 | MAX. O.C. SPACING IF ANCHORING THROUGH THE INTEGRAL FIN PER SHEET 4 |
|---|---|
| APPLIES TO A, B, C OR D ANCHORS (SEE TABLE 2) | APPLIES TO E OR F ANCHORS (SEE TABLE 3) |
| 15" | 4" |

TABLE DIMENSIONS MAY BE ORIENTED VERTICALLY OR HORIZONTALLY AS SHOWN.

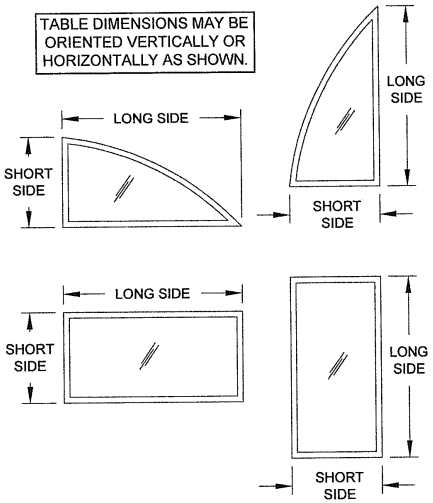


TABLE 5:

| Window Design Pressure, (+/- psf) | | | | | | | | | | | | | Use this table for Glass Type: | 8 |
|---|---|---|---|---|---|---|---|---|---|---|---|---|---|---|
| 1/8" T Cap - Airspace - 5/16" A/A with PVB | | | | | | | | | | | | | | |
| Window Dimensions | | Long Side (in) | | | | | | | | | | | | |
| | | 60.926 | 64 | 66 | 68 | 70 | 74 | 77 | 80 | 84 | 87 | 92 | 97 | 99 |
| Short Side (in) | 32 | +/-50 | +/-50 | +/-50 | +/-50 | +/-50 | +/-50 | +/-50 | +/-50 | +/-50 | +/-50 | +/-50 | +/-50 | +/-50 |
| | 34 | +/-50 | +/-50 | +/-50 | +/-50 | +/-50 | +/-50 | +/-50 | +/-50 | +/-50 | +/-50 | +/-50 | +/-47.3 | +/-46.7 |
| | 36 | +/-50 | +/-50 | +/-50 | +/-50 | +/-50 | +/-50 | +/-50 | +/-50 | +/-50 | +/-50 | +/-47.5 | +/-45.4 | +/-44.6 |
| | 38 | +/-50 | +/-50 | +/-50 | +/-50 | +/-50 | +/-50 | +/-50 | +/-50 | +/-50 | +/-49.1 | +/-46.1 | +/-43.9 | |
| | 40 | +/-50 | +/-50 | +/-50 | +/-50 | +/-50 | +/-50 | +/-50 | +/-50 | +/-50 | +/-48.2 | +/-45.1 | | |
| | 42 | +/-50 | +/-50 | +/-50 | +/-50 | +/-50 | +/-50 | +/-50 | +/-50 | +/-49.8 | +/-47.4 | | | |
| | 44 | +/-50 | +/-50 | +/-50 | +/-50 | +/-50 | +/-50 | +/-50 | +/-50 | +/-48.9 | | | | |
| | 46 | +/-50 | +/-50 | +/-50 | +/-50 | +/-50 | +/-50 | +/-50 | +/-49.9 | | | | | |
| | 48 | +/-50 | +/-50 | +/-50 | +/-50 | +/-50 | +/-50 | +/-50 | | | | | | |
| | 50 | +/-50 | +/-50 | +/-50 | +/-50 | +/-50 | +/-50 | | | | | | | |
| | 52 | +/-50 | +/-50 | +/-50 | +/-50 | +/-50 | | | | | | | | |
| | 54 | +/-50 | +/-50 | +/-50 | +/-50 | | | | | | | | | |
| | 56 | +/-50 | +/-50 | +/-50 | | | | | | | | | | |
| | 58 | +/-50 | +/-50 | | | | | | | | | | | |
| | 60.926 | +/-50 | | | | | | | | | | | | |

| MAX. O.C. SPACING IF ANCHORING THROUGH THE FRAME PER SHEETS 3 & 4 | MAX. O.C. SPACING IF ANCHORING THROUGH THE INTEGRAL FIN PER SHEET 4 |
|---|---|
| APPLIES TO A, B, C OR D ANCHORS (SEE TABLE 2) | APPLIES TO E OR F ANCHORS (SEE TABLE 3) |
| 15" | 3.5" FOR E ANCHORS, 4" FOR F ANCHORS |

NOTES:
1) BUCK DIMENSIONS SHOWN.

2) FOR SIZES NOT SHOWN, ROUND UP TO THE NEXT AVAILABLE SHORT OR LONG DIMENSION.

3) FOR ARCHITECTURAL WINDOWS (SEE SHEET 2), FIND THE SMALLEST SQUARE WINDOW SIZE IN THE TABLE(S) ABOVE WHICH THE ARCHITECTURAL WINDOW WILL COMPLETELY FIT WITHIN.

**PRODUCT REVISED**
**as complying with the Florida Building Code**
**NOA–No.** 20-0401.16
**Expiration Date:** 04/30/2025
**By:** Manuel Perez
**Miami–Dade Product Control**

Revision: C) NO CHANGES THIS SHEET. AK - 03/16/20


1070 TECHNOLOGY DRIVE
N. VENICE, FL 34275
(941)-480-1600


PGT® REGISTRATION #29296

| Series | Desc. | Title | Sheet | Scale | DWG No. | Drawn By | Date | Rev. |
|---|---|---|---|---|---|---|---|---|
| PW-5520 | DESIGN PRESSURE TABLES A | VINYL FIXED WINDOW NOA (LM&SM) | 6 OF 11 | NTS | MD-5520.0 | J ROSOWSKI | 9/9/14 | C |

ANTHONY LYNN MILLER LICENSE No. 58705 STATE OF FLORIDA PROFESSIONAL ENGINEER
3/19/20

A. LYNN MILLER, P.E.
P.E.# 58705

TABLE 6:

| Window Design Pressure, (+/- psf) | | | | | | | | | | | | | | Use this table for Glass Types: | 9 & 10 |
|---|---|---|---|---|---|---|---|---|---|---|---|---|---|---|---|
| 3/16" A Cap - Airspace - 5/16" A/A with PVB | | | | | | | | | | | | | | | |
| 3/16" T Cap - Airspace - 5/16" A/A with PVB | | | | | | | | | | | | | | | |
| Window Dimensions | | Long Side (in) | | | | | | | | | | | | | |
| | | 60.926 | 64 | 66 | 68 | 70 | 74 | 77 | 80 | 84 | 87 | 92 | 97 | 99 | |
| Short Side (in) | 32 | +/-50 | +/-50 | +/-50 | +/-50 | +/-50 | +/-50 | +/-50 | +/-50 | +/-50 | +/-50 | +/-50 | +/-50 | +/-50 | |
| | 34 | +/-50 | +/-50 | +/-50 | +/-50 | +/-50 | +/-50 | +/-50 | +/-50 | +/-50 | +/-50 | +/-50 | +/-50 | +/-50 | |
| | 36 | +/-50 | +/-50 | +/-50 | +/-50 | +/-50 | +/-50 | +/-50 | +/-50 | +/-50 | +/-50 | +/-50 | +/-50 | +/-50 | |
| | 38 | +/-50 | +/-50 | +/-50 | +/-50 | +/-50 | +/-50 | +/-50 | +/-50 | +/-50 | +/-50 | +/-50 | +/-50 | | |
| | 40 | +/-50 | +/-50 | +/-50 | +/-50 | +/-50 | +/-50 | +/-50 | +/-50 | +/-50 | +/-50 | +/-50 | | | |
| | 42 | +/-50 | +/-50 | +/-50 | +/-50 | +/-50 | +/-50 | +/-50 | +/-50 | +/-50 | +/-50 | | | | |
| | 44 | +/-50 | +/-50 | +/-50 | +/-50 | +/-50 | +/-50 | +/-50 | +/-50 | +/-50 | | | | | |
| | 46 | +/-50 | +/-50 | +/-50 | +/-50 | +/-50 | +/-50 | +/-50 | +/-50 | | | | | | |
| | 48 | +/-50 | +/-50 | +/-50 | +/-50 | +/-50 | +/-50 | +/-50 | | | | | | | |
| | 50 | +/-50 | +/-50 | +/-50 | +/-50 | +/-50 | +/-50 | | | | | | | | |
| | 52 | +/-50 | +/-50 | +/-50 | +/-50 | +/-50 | | | | | | | | | |
| | 54 | +/-50 | +/-50 | +/-50 | +/-50 | | | | | | | | | | |
| | 56 | +/-50 | +/-50 | +/-50 | | | | | | | | | | | |
| | 58 | +/-50 | +/-50 | | | | | | | | | | | | |
| | 60.926 | +/-50 | | | | | | | | | | | | | |

| MAX. O.C. SPACING IF ANCHORING THROUGH THE FRAME PER SHEETS 3 & 4 | MAX. O.C. SPACING IF ANCHORING THROUGH THE INTEGRAL FIN PER SHEET 4 |
|---|---|
| APPLIES TO A, B, C OR D ANCHORS (SEE TABLE 2) | APPLIES TO E OR F ANCHORS (SEE TABLE 3) |
| 15" | 3.5" FOR E ANCHORS, 4" FOR F ANCHORS |

TABLE DIMENSIONS MAY BE ORIENTED VERTICALLY OR HORIZONTALLY AS SHOWN.

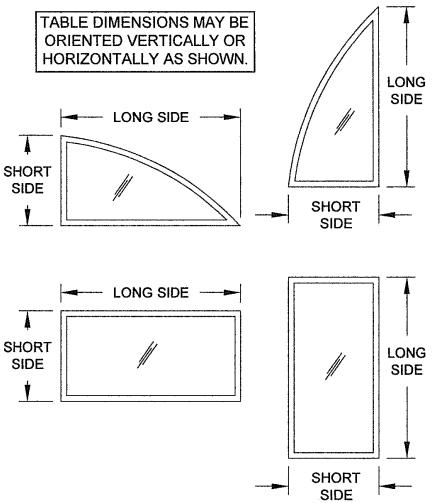


TABLE 7:

| Window Design Pressure, (+/- psf) | | | | | | | | | | | | | | Use this table for Glass Type: | 11 |
|---|---|---|---|---|---|---|---|---|---|---|---|---|---|---|---|
| 1/8" T Cap - Airspace - 7/16" A/A with PVB | | | | | | | | | | | | | | | |
| Window Dimensions | | Long Side (in) | | | | | | | | | | | | | |
| | | 60.926 | 64 | 66 | 68 | 70 | 74 | 77 | 80 | 84 | 87 | 92 | 97 | 99 | |
| Short Side (in) | 32 | +/-70 | +/-70 | +/-70 | +/-70 | +/-70 | +/-70 | +/-70 | +/-70 | +/-70 | +/-70 | +/-70 | +/-70 | +/-70 | |
| | 34 | +/-70 | +/-70 | +/-70 | +/-70 | +/-70 | +/-70 | +/-70 | +/-70 | +/-70 | +/-70 | +/-70 | +/-70 | +/-70 | |
| | 36 | +/-70 | +/-70 | +/-70 | +/-70 | +/-70 | +/-70 | +/-70 | +/-70 | +/-70 | +/-70 | +/-70 | +/-70 | +/-70 | |
| | 38 | +/-70 | +/-70 | +/-70 | +/-70 | +/-70 | +/-70 | +/-70 | +/-70 | +/-70 | +/-70 | +/-70 | +/-70 | | |
| | 40 | +/-70 | +/-70 | +/-70 | +/-70 | +/-70 | +/-70 | +/-70 | +/-70 | +/-70 | +/-70 | +/-70 | | | |
| | 42 | +/-70 | +/-70 | +/-70 | +/-70 | +/-70 | +/-70 | +/-70 | +/-70 | +/-70 | +/-70 | | | | |
| | 44 | +/-70 | +/-70 | +/-70 | +/-70 | +/-70 | +/-70 | +/-70 | +/-70 | +/-70 | | | | | |
| | 46 | +/-70 | +/-70 | +/-70 | +/-70 | +/-70 | +/-70 | +/-70 | +/-70 | | | | | | |
| | 48 | +/-70 | +/-70 | +/-70 | +/-70 | +/-70 | +/-70 | +/-70 | | | | | | | |
| | 50 | +/-70 | +/-70 | +/-70 | +/-70 | +/-70 | +/-70 | | | | | | | | |
| | 52 | +/-70 | +/-70 | +/-70 | +/-70 | +/-70 | | | | | | | | | |
| | 54 | +/-70 | +/-70 | +/-70 | +/-70 | | | | | | | | | | |
| | 56 | +/-70 | +/-70 | +/-70 | | | | | | | | | | | |
| | 58 | +/-70 | +/-70 | | | | | | | | | | | | |
| | 60.926 | +/-70 | | | | | | | | | | | | | |

| MAX. O.C. SPACING IF ANCHORING THROUGH THE FRAME PER SHEETS 3 & 4 | MAX. O.C. SPACING IF ANCHORING THROUGH THE INTEGRAL FIN PER SHEET 4 |
|---|---|
| APPLIES TO B, C OR D ANCHORS (SEE TABLE 2) | APPLIES TO F ANCHORS (SEE TABLE 3) |
| 15.5" | 4" |

NOTES:
1) BUCK DIMENSIONS SHOWN.

2) FOR SIZES NOT SHOWN, ROUND UP TO THE NEXT AVAILABLE SHORT OR LONG DIMENSION.

3) FOR ARCHITECTURAL WINDOWS (SEE SHEET 2), FIND THE SMALLEST SQUARE WINDOW SIZE IN THE TABLE(S) ABOVE WHICH THE ARCHITECTURAL WINDOW WILL COMPLETELY FIT WITHIN.

**PRODUCT REVISED**
**as complying with the Florida Building Code**
**NOA–No. 20-0401.16**
**Expiration Date: 04/30/2025**
**By:** Manuel Perez
**Miami-Dade Product Control**

Revision:
C) NO CHANGES THIS SHEET.
AK - 03/16/20


1070 TECHNOLOGY DRIVE
N. VENICE, FL 34275
(941)-480-1600
REGISTRATION #29296


| Series | Desc. / Title | Date | Drawn By | Rev. |
|---|---|---|---|---|
| PW-5520 | VINYL FIXED WINDOW NOA (LM&SM) | 9/9/14 | J ROSOWSKI | C |

| Scale | Sheet | DWG No. |
|---|---|---|
| NTS | 7 OF 11 | MD-5520.0 |

DESIGN PRESSURE TABLES B

ANTHONY LYNN MILLER
LICENSE
No. 58705
3/19/20
STATE OF FLORIDA
PROFESSIONAL ENGINEER

A. LYNN MILLER, P.E.
P.E.# 58705

TABLE 8:

| Window Design Pressure, (+/- psf) | | | | | | | | | | | | Use this table for Glass Types: | 12 |
|---|---|---|---|---|---|---|---|---|---|---|---|---|---|
| 3/16" A Cap - Airspace - 7/16" A/A with PVB | | | | | | | | | | | | | |
| Window Dimensions | | Long Side (in) | | | | | | | | | | | |
| | | 69.649 | 71 | 73 | 75 | 78 | 80 | 85 | 86 | 89 | 92 | 96 | 99 |
| Short Side (in) | 32 | +/-70 | +/-70 | +/-70 | +/-70 | +/-70 | +/-70 | +/-70 | +/-70 | +/-70 | +/-70 | +/-70 | +/-70 |
| | 34 | +/-70 | +/-70 | +/-70 | +/-70 | +/-70 | +/-70 | +/-70 | +/-70 | +/-70 | +/-70 | +/-70 | +/-70 |
| | 36 | +/-70 | +/-70 | +/-70 | +/-70 | +/-70 | +/-70 | +/-70 | +/-70 | +/-70 | +/-70 | +/-70 | +/-70 |
| | 38 | +/-70 | +/-70 | +/-70 | +/-70 | +/-70 | +/-70 | +/-70 | +/-70 | +/-70 | +/-70 | +/-70 | +/-70 |
| | 40 | +/-70 | +/-70 | +/-70 | +/-70 | +/-70 | +/-70 | +/-70 | +/-70 | +/-70 | +/-70 | +/-70 | +/-70 |
| | 42 | +/-70 | +/-70 | +/-70 | +/-70 | +/-70 | +/-70 | +/-70 | +/-70 | +/-70 | +/-70 | +/-69.5 | +/-66.7 |
| | 44 | +/-70 | +/-70 | +/-70 | +/-70 | +/-70 | +/-70 | +/-70 | +/-70 | +/-70 | +/-69.9 | +/-66.4 | +/-63.7 |
| | 46 | +/-70 | +/-70 | +/-70 | +/-70 | +/-70 | +/-70 | +/-70 | +/-70 | +/-69.9 | +/-67.4 | +/-63.9 | +/-61.7 |
| | 48 | +/-70 | +/-70 | +/-70 | +/-70 | +/-70 | +/-70 | +/-70 | +/-70 | +/-67.8 | +/-65.3 | +/-61.9 | +/-59.7 |
| | 50 | +/-70 | +/-70 | +/-70 | +/-70 | +/-70 | +/-70 | +/-69.5 | +/-68.5 | +/-65.9 | +/-63.4 | +/-59.9 | |
| | 52 | +/-70 | +/-70 | +/-70 | +/-70 | +/-70 | +/-70 | +/-67.8 | +/-66.9 | +/-64.2 | +/-61.6 | | |
| | 54 | +/-70 | +/-70 | +/-70 | +/-70 | +/-70 | +/-70 | +/-66.2 | +/-65.3 | +/-62.5 | | | |
| | 56 | +/-70 | +/-70 | +/-70 | +/-70 | +/-70 | +/-69.2 | +/-64.7 | +/-63.8 | | | | |
| | 57 | +/-70 | +/-70 | +/-70 | +/-70 | +/-69.8 | +/-68.1 | +/-64 | | | | | |
| | 60 | +/-70 | +/-70 | +/-70 | +/-69.7 | +/-67 | +/-65.3 | | | | | | |
| | 62 | +/-70 | +/-70 | +/-69.9 | +/-67.9 | +/-65.2 | | | | | | | |
| | 64 | +/-70 | +/-70 | +/-68.3 | +/-66.3 | | | | | | | | |
| | 66 | +/-69.9 | +/-68.9 | +/-66.7 | | | | | | | | | |
| | 68 | +/-68.4 | +/-67.4 | | | | | | | | | | |
| | 69.649 | +/-67.1 | | | | | | | | | | | |

| MAX. O.C. SPACING IF ANCHORING THROUGH THE FRAME PER SHEETS 3 & 4 | MAX. O.C. SPACING IF ANCHORING THROUGH THE INTEGRAL FIN PER SHEET 4 |
|---|---|
| APPLIES TO B, C OR D ANCHORS (SEE TABLE 2) | APPLIES TO F ANCHORS (SEE TABLE 3) |
| 15.5" | 4" |

TABLE 9:

| Window Design Pressure, (+/- psf) | | | | | | | | | | | | Use this table for Glass Type: | 13 |
|---|---|---|---|---|---|---|---|---|---|---|---|---|---|
| 3/16" T Cap - Airspace - 7/16" A/A with PVB | | | | | | | | | | | | | |
| Window Dimensions | | Long Side (in) | | | | | | | | | | | |
| | | 69.649 | 71 | 73 | 75 | 78 | 80 | 85 | 86 | 89 | 92 | 96 | 99 |
| Short Side (in) | 32 | +/-70 | +/-70 | +/-70 | +/-70 | +/-70 | +/-70 | +/-70 | +/-70 | +/-70 | +/-70 | +/-70 | +/-70 |
| | 34 | +/-70 | +/-70 | +/-70 | +/-70 | +/-70 | +/-70 | +/-70 | +/-70 | +/-70 | +/-70 | +/-70 | +/-70 |
| | 36 | +/-70 | +/-70 | +/-70 | +/-70 | +/-70 | +/-70 | +/-70 | +/-70 | +/-70 | +/-70 | +/-70 | +/-70 |
| | 38 | +/-70 | +/-70 | +/-70 | +/-70 | +/-70 | +/-70 | +/-70 | +/-70 | +/-70 | +/-70 | +/-70 | +/-70 |
| | 40 | +/-70 | +/-70 | +/-70 | +/-70 | +/-70 | +/-70 | +/-70 | +/-70 | +/-70 | +/-70 | +/-70 | +/-70 |
| | 42 | +/-70 | +/-70 | +/-70 | +/-70 | +/-70 | +/-70 | +/-70 | +/-70 | +/-70 | +/-70 | +/-70 | +/-70 |
| | 44 | +/-70 | +/-70 | +/-70 | +/-70 | +/-70 | +/-70 | +/-70 | +/-70 | +/-70 | +/-70 | +/-70 | +/-70 |
| | 46 | +/-70 | +/-70 | +/-70 | +/-70 | +/-70 | +/-70 | +/-70 | +/-70 | +/-70 | +/-70 | +/-70 | +/-68.6 |
| | 48 | +/-70 | +/-70 | +/-70 | +/-70 | +/-70 | +/-70 | +/-70 | +/-70 | +/-70 | +/-70 | +/-68.8 | +/-66.3 |
| | 50 | +/-70 | +/-70 | +/-70 | +/-70 | +/-70 | +/-70 | +/-70 | +/-70 | +/-70 | +/-70 | +/-66.6 | |
| | 52 | +/-70 | +/-70 | +/-70 | +/-70 | +/-70 | +/-70 | +/-70 | +/-70 | +/-70 | +/-68.5 | | |
| | 54 | +/-70 | +/-70 | +/-70 | +/-70 | +/-70 | +/-70 | +/-70 | +/-70 | +/-69.5 | | | |
| | 56 | +/-70 | +/-70 | +/-70 | +/-70 | +/-70 | +/-70 | +/-70 | +/-70 | | | | |
| | 57 | +/-70 | +/-70 | +/-70 | +/-70 | +/-70 | +/-70 | +/-70 | | | | | |
| | 60 | +/-70 | +/-70 | +/-70 | +/-70 | +/-70 | +/-70 | | | | | | |
| | 62 | +/-70 | +/-70 | +/-70 | +/-70 | +/-70 | | | | | | | |
| | 64 | +/-70 | +/-70 | +/-70 | +/-70 | | | | | | | | |
| | 66 | +/-70 | +/-70 | +/-70 | | | | | | | | | |
| | 68 | +/-70 | +/-70 | | | | | | | | | | |
| | 69.649 | +/-70 | | | | | | | | | | | |

| MAX. O.C. SPACING IF ANCHORING THROUGH THE FRAME PER SHEETS 3 & 4 | MAX. O.C. SPACING IF ANCHORING THROUGH THE INTEGRAL FIN PER SHEET 4 |
|---|---|
| APPLIES TO B, C OR D ANCHORS (SEE TABLE 2) | APPLIES TO F ANCHORS (SEE TABLE 3) |
| 15.5" | 3.9" |

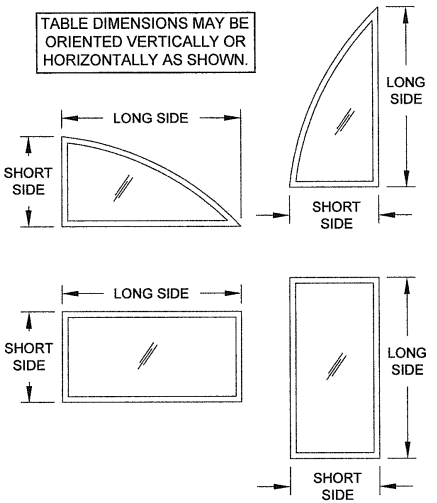


NOTES:
1) BUCK DIMENSIONS SHOWN.

2) FOR SIZES NOT SHOWN, ROUND UP TO THE NEXT AVAILABLE SHORT OR LONG DIMENSION.

3) FOR ARCHITECTURAL WINDOWS (SEE SHEET 2), FIND THE SMALLEST SQUARE WINDOW SIZE IN THE TABLE(S) ABOVE WHICH THE ARCHITECTURAL WINDOW WILL COMPLETELY FIT WITHIN.

**PRODUCT REVISED**
**as complying with the Florida Building Code**
**NOA No. 20-0401.16**
**Expiration Date: 04/30/2025**
**By:** Manuel Perez
**Miami-Dade Product Control**

Revision:
C) NO CHANGES THIS SHEET.
AK - 03/16/20


1070 TECHNOLOGY DRIVE
N. VENICE, FL 34275
(941)-480-1600


REGISTRATION #29296

| Series Desc. | Title | Date | Drawn By | Rev. | Sheet | Scale | DWG No. |
|---|---|---|---|---|---|---|---|
| PW-5520 | DESIGN PRESSURE TABLES C | 9/9/14 | J ROSOWSKI | C | 8 OF 11 | NTS | MD-5520.0 |

VINYL FIXED WINDOW NOA (LM&SM)

ANTHONY LYNN MILLER LICENSE No. 58705 STATE OF FLORIDA PROFESSIONAL ENGINEER
3/19/20

A. LYNN MILLER, P.E.
P.E.# 58705

TABLE 10:

| Window Design Pressure, (+/- psf) | | | | | | | | | | | | | Use this table for Glass Type: | 14 |
|---|---|---|---|---|---|---|---|---|---|---|---|---|---|---|
| 3/16" A Cap - Airspace - 7/16" A/A with SG | | | | | | | | | | | | | | |
| Window Dimensions | | Long Side (in) | | | | | | | | | | | | |
| | | 69.649 | 71 | 73 | 75 | 78 | 80 | 85 | 86 | 89 | 92 | 96 | 99 | |
| Short Side (in) | 32 | +80/-110 | +80/-110 | +80/-110 | +80/-110 | +80/-110 | +80/-110 | +80/-110 | +80/-110 | +80/-110 | +80/-110 | +80/-110 | +80/-110 | |
| | 34 | +80/-110 | +80/-110 | +80/-110 | +80/-110 | +80/-110 | +80/-110 | +80/-110 | +80/-110 | +80/-110 | +80/-109.4 | +80/-108.3 | +80/-107.6 | |
| | 36 | +80/-110 | +80/-110 | +80/-110 | +80/-110 | +80/-109.5 | +80/-108.6 | +80/-106.8 | +80/-106.5 | +80/-105.5 | +80/-104.7 | +80/-103.6 | +80/-102.9 | |
| | 38 | +80/-109.7 | +80/-108.9 | +80/-107.8 | +80/-106.8 | +80/-105.5 | +80/-104.6 | +80/-102.7 | +80/-102.4 | +80/-101.4 | +80/-100.5 | +80/-99.4 | +80/-98.7 | |
| | 40 | +80/-106.3 | +80/-105.5 | +80/-104.4 | +80/-103.3 | +80/-101.9 | +80/-101 | +80/-99.1 | +80/-98.7 | +80/-97.7 | +80/-96.8 | +80/-95.7 | +80/-95 | |
| | 42 | +80/-103.3 | +80/-102.5 | +80/-101.3 | +80/-100.2 | +80/-98.8 | +80/-97.9 | +80/-95.8 | +80/-95.5 | +80/-94.5 | +80/-93.5 | +80/-92.4 | +80/-90.7 | |
| | 44 | +80/-100.7 | +80/-99.8 | +80/-98.6 | +80/-97.5 | +80/-96 | +80/-95 | +80/-92.9 | +80/-92.6 | +80/-91.5 | +80/-90.4 | +80/-87.1 | +80/-84.7 | |
| | 46 | +80/-98.4 | +80/-97.5 | +80/-96.2 | +80/-95 | +80/-93.4 | +80/-92.5 | +80/-90.3 | +80/-89.9 | +80/-88.1 | +80/-85.5 | +80/-83.1 | +80/-81.6 | |
| | 48 | +80/-96.3 | +80/-95.4 | +80/-94.1 | +80/-92.9 | +80/-91.2 | +80/-90.2 | +80/-88 | +80/-87.6 | +80/-84.6 | +80/-82.6 | +80/-80.2 | +/-78.6 | |
| | 50 | +80/-94.6 | +80/-93.6 | +80/-92.2 | +80/-90.9 | +80/-89.2 | +80/-88.2 | +80/-85.4 | +80/-84.5 | +80/-82.4 | +80/-80.2 | +/-77.6 | | |
| | 52 | +80/-93 | +80/-92 | +80/-90.5 | +80/-89.2 | +80/-87.4 | +80/-86.4 | +80/-83.3 | +80/-82.5 | +80/-80.2 | +/-78 | | | |
| | 54 | +80/-91.7 | +80/-90.6 | +80/-89.1 | +80/-87.7 | +80/-85.8 | +80/-84.7 | +80/-81.3 | +80/-80.4 | +/-78.1 | | | | |
| | 56 | +80/-90.5 | +80/-89.4 | +80/-87.8 | +80/-86.4 | +80/-84.4 | +80/-83.2 | +/-79.3 | +/-78.5 | | | | | |
| | 57 | +80/-90 | +80/-88.8 | +80/-87.2 | +80/-85.8 | +80/-83.4 | +80/-82 | +/-78.4 | | | | | | |
| | 60 | +80/-87.2 | +80/-86 | +80/-84 | +80/-82.5 | +80/-80.1 | +/-78.6 | | | | | | | |
| | 62 | +80/-84.6 | +80/-83.8 | +80/-82.1 | +80/-80.4 | +/-78 | | | | | | | | |
| | 64 | +80/-82.9 | +80/-82 | +80/-80.1 | +/-78.4 | | | | | | | | | |
| | 66 | +80/-81.1 | +80/-80.1 | +/-78.3 | | | | | | | | | | |
| | 68 | +/-79.3 | +/-78.4 | | | | | | | | | | | |
| | 69.649 | +/-77.7 | | | | | | | | | | | | |

| MAX. O.C. SPACING IF ANCHORING THROUGH THE FRAME PER SHEETS 3 & 4 | MAX. O.C. SPACING IF ANCHORING THROUGH THE INTEGRAL FIN PER SHEET 4 |
|---|---|
| APPLIES TO B, C OR D ANCHORS (SEE TABLE 2) | NOT APPLICABLE |
| 13.2" | |

TABLE DIMENSIONS MAY BE ORIENTED VERTICALLY OR HORIZONTALLY AS SHOWN.

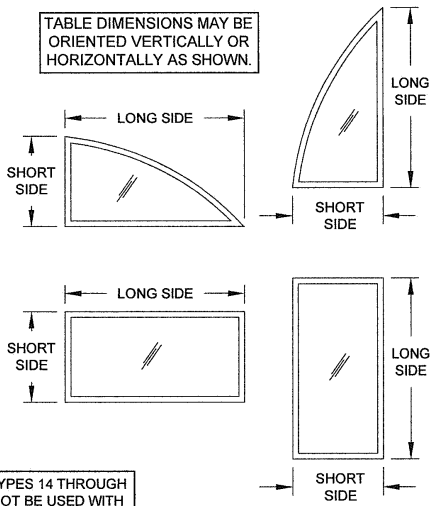


GLASS TYPES 14 THROUGH 17 MAY NOT BE USED WITH J-CHANNEL OR INTEGRAL FIN FRAMES.

TABLE 11:

| Window Design Pressure, (+/- psf) | | | | | | | | | | | | | | Use this table for Glass Type: | 15 |
|---|---|---|---|---|---|---|---|---|---|---|---|---|---|---|---|
| 3/16" T Cap - Airspace - 7/16" A/A with SG | | | | | | | | | | | | | | | |
| Window Dimensions | | Long Side (in) | | | | | | | | | | | | | |
| | | 77.76 | 79 | 81 | 83 | 86 | 87 | 91 | 94 | 96 | 99 | 104 | 107 | 111 | |
| Short Side (in) | 36 | +80/-110 | +80/-110 | +80/-110 | +80/-110 | +80/-110 | +80/-110 | +80/-110 | +80/-110 | +80/-110 | +80/-110 | +80/-110 | +80/-110 | +80/-110 | |
| | 40 | +80/-110 | +80/-110 | +80/-110 | +80/-110 | +80/-110 | +80/-109.9 | +80/-108.5 | +80/-107.5 | +80/-106.9 | +80/-106.1 | +80/-104.8 | +80/-104.1 | +80/-103.3 | |
| | 42 | +80/-110 | +80/-109.8 | +80/-108.8 | +80/-107.9 | +80/-106.7 | +80/-106.3 | +80/-104.8 | +80/-103.8 | +80/-103.2 | +80/-100.8 | +80/-97.7 | +80/-96.4 | +80/-94.8 | |
| | 44 | +80/-107.3 | +80/-106.7 | +80/-105.7 | +80/-104.7 | +80/-103.4 | +80/-103 | +80/-101.4 | +80/-98.6 | +80/-96.7 | +80/-94.1 | +80/-91.4 | +80/-90.3 | +80/-89.2 | |
| | 48 | +80/-102 | +80/-101.3 | +80/-100.3 | +80/-99.2 | +80/-97.3 | +80/-96.2 | +80/-92.5 | +80/-90.4 | +80/-89.2 | +80/-87.3 | +80/-84.4 | +80/-82.7 | +80/-80.5 | |
| | 50 | +80/-99.8 | +80/-99.1 | +80/-98 | +80/-96.9 | +80/-93.9 | +80/-93.1 | +80/-89.9 | +80/-87.7 | +80/-86.2 | +80/-84.3 | +80/-81.1 | +/-79.3 | +/-77 | |
| | 51 | +80/-98.8 | +80/-98 | +80/-96.9 | +80/-95.8 | +80/-92.8 | +80/-92 | +80/-88.7 | +80/-86.4 | +80/-85 | +80/-82.8 | +/-79.6 | +/-77.7 | +/-75.3 | |
| | 54 | +80/-96.1 | +80/-95.3 | +80/-94 | +80/-92.1 | +80/-89.4 | +80/-88.5 | +80/-85.1 | +80/-82.7 | +80/-81.1 | +/-78.9 | +/-75.3 | +/-73.2 | +/-70.6 | |
| | 56 | +80/-94 | +80/-93.2 | +80/-91.6 | +80/-90.1 | +80/-87.2 | +80/-86.3 | +80/-82.8 | +80/-80.2 | +/-78.6 | +/-76.3 | +/-72.5 | +/-70.5 | | |
| | 58 | +80/-91.4 | +80/-90.6 | +80/-89 | +80/-87.5 | +80/-85.1 | +80/-84.2 | +80/-80.6 | +/-78 | +/-76.3 | +/-73.8 | +/-70.2 | | | |
| | 61 | +80/-87.8 | +80/-87 | +80/-85.3 | +80/-83.6 | +80/-81.2 | +80/-80.5 | +/-77.3 | +/-74.6 | +/-72.8 | +/-70.4 | | | | |
| | 63 | +80/-85.5 | +80/-84.6 | +80/-82.8 | +80/-81.1 | +/-78.8 | +/-78 | +/-74.8 | +/-72.3 | +/-70.6 | | | | | |
| | 64 | +80/-84.4 | +80/-83.5 | +80/-81.7 | +/-80 | +/-77.5 | +/-76.6 | +/-73.5 | +/-71.2 | | | | | | |
| | 66 | +80/-82.2 | +80/-81.2 | +/-79.4 | +/-77.6 | +/-75 | +/-74.2 | +/-71 | | | | | | | |
| | 68 | +/-80 | +/-79.1 | +/-77.2 | +/-75.4 | +/-72.7 | +/-71.9 | | | | | | | | |
| | 70 | +/-78 | +/-77.1 | +/-75 | +/-73.2 | +/-70.5 | | | | | | | | | |
| | 72 | +/-76 | +/-75 | +/-73 | +/-71.1 | | | | | | | | | | |
| | 74 | +/-74.1 | +/-73 | +/-71 | | | | | | | | | | | |
| | 76 | +/-72.2 | +/-71.1 | | | | | | | | | | | | |
| | 77.76 | +/-70.5 | | | | | | | | | | | | | |

| MAX. O.C. SPACING IF ANCHORING THROUGH THE FRAME PER SHEETS 3 & 4 | MAX. O.C. SPACING IF ANCHORING THROUGH THE INTEGRAL FIN PER SHEET 4 |
|---|---|
| APPLIES TO B, C OR D ANCHORS (SEE TABLE 2) | NOT APPLICABLE |
| 13.2" | |

NOTES:
1) BUCK DIMENSIONS SHOWN.

2) FOR SIZES NOT SHOWN, ROUND UP TO THE NEXT AVAILABLE SHORT OR LONG DIMENSION.

3) FOR ARCHITECTURAL WINDOWS (SEE SHEET 2), FIND THE SMALLEST SQUARE WINDOW SIZE IN THE TABLE(S) ABOVE WHICH THE ARCHITECTURAL WINDOW WILL COMPLETELY FIT WITHIN.

**PRODUCT REVISED**
**as complying with the Florida Building Code**
**NOA No. 20-0401.16**
**Expiration Date: 04/30/2025**
**By:** Manuel Perez
**Miami-Dade Product Control**

Revision: C) NO CHANGES THIS SHEET. AK - 03/16/20


1070 TECHNOLOGY DRIVE
N. VENICE, FL 34275
(941)-480-1600
REGISTRATION #29296


| Series | Desc. | Title | Date | Rev. |
|---|---|---|---|---|
| | | VINYL FIXED WINDOW NOA (LM&SM) | 9/9/14 | C |
| | | | Drawn By: J ROSOWSKI | |
| | | DESIGN PRESSURE TABLES D | | DWG No.: MD-5520.0 |
| PW-5520 | | | Scale: NTS | Sheet: 9 OF 11 |

ANTHONY LYNN MILLER LICENSE No. 58705 STATE OF FLORIDA PROFESSIONAL ENGINEER
3/19/20

A. LYNN MILLER, P.E.
P.E.# 58705

TABLE 12:

| Window Design Pressure, (+/- psf) | | | | | | | | | | | | | Use this table for Glass Type: | 16 |
|---|---|---|---|---|---|---|---|---|---|---|---|---|---|---|
| 1/8" T Cap - Airspace - 7/16" H/H with SG | | | | | | | | | | | | | | |
| Window Dimensions | Long Side (in) | | | | | | | | | | | | | |
| Short Side (in) | 60.926 | 64 | 66 | 68 | 70 | 74 | 77 | 80 | 84 | 87 | 92 | 97 | 99 | |
| 32 | +80/-110 | +80/-110 | +80/-110 | +80/-110 | +80/-110 | +80/-110 | +80/-110 | +80/-110 | +80/-110 | +80/-110 | +80/-110 | +80/-110 | +80/-110 | |
| 34 | +80/-110 | +80/-110 | +80/-110 | +80/-110 | +80/-110 | +80/-110 | +80/-110 | +80/-110 | +80/-110 | +80/-110 | +80/-110 | +80/-110 | +80/-110 | |
| 36 | +80/-110 | +80/-110 | +80/-110 | +80/-110 | +80/-110 | +80/-110 | +80/-110 | +80/-110 | +80/-110 | +80/-110 | +80/-110 | +80/-110 | +80/-110 | |
| 38 | +80/-110 | +80/-110 | +80/-110 | +80/-110 | +80/-110 | +80/-110 | +80/-110 | +80/-110 | +80/-110 | +80/-110 | +80/-110 | +80/-110 | | |
| 40 | +80/-110 | +80/-110 | +80/-110 | +80/-110 | +80/-110 | +80/-110 | +80/-110 | +80/-110 | +80/-110 | +80/-110 | +80/-110 | | | |
| 42 | +80/-110 | +80/-110 | +80/-110 | +80/-110 | +80/-110 | +80/-110 | +80/-110 | +80/-110 | +80/-110 | +80/-110 | | | | |
| 44 | +80/-110 | +80/-110 | +80/-110 | +80/-110 | +80/-110 | +80/-110 | +80/-110 | +80/-110 | +80/-110 | | | | | |
| 46 | +80/-110 | +80/-110 | +80/-110 | +80/-110 | +80/-110 | +80/-110 | +80/-110 | +80/-110 | | | | | | |
| 48 | +80/-110 | +80/-110 | +80/-110 | +80/-110 | +80/-110 | +80/-110 | +80/-110 | | | | | | | |
| 50 | +80/-110 | +80/-110 | +80/-110 | +80/-110 | +80/-110 | +80/-110 | | | | | | | | |
| 52 | +80/-110 | +80/-110 | +80/-110 | +80/-110 | +80/-110 | | | | | | | | | |
| 54 | +80/-110 | +80/-110 | +80/-110 | +80/-110 | | | | | | | | | | |
| 56 | +80/-110 | +80/-110 | +80/-110 | | | | | | | | | | | |
| 58 | +80/-110 | +80/-110 | | | | | | | | | | | | |
| 60.926 | +80/-110 | | | | | | | | | | | | | |

| MAX. O.C. SPACING IF ANCHORING THROUGH THE FRAME PER SHEETS 3 & 4 | MAX. O.C. SPACING IF ANCHORING THROUGH THE INTEGRAL FIN PER SHEET 4 |
|---|---|
| APPLIES TO B, C OR D ANCHORS (SEE TABLE 2) | NOT APPLICABLE |
| 11.8" | |

TABLE DIMENSIONS MAY BE ORIENTED VERTICALLY OR HORIZONTALLY AS SHOWN.

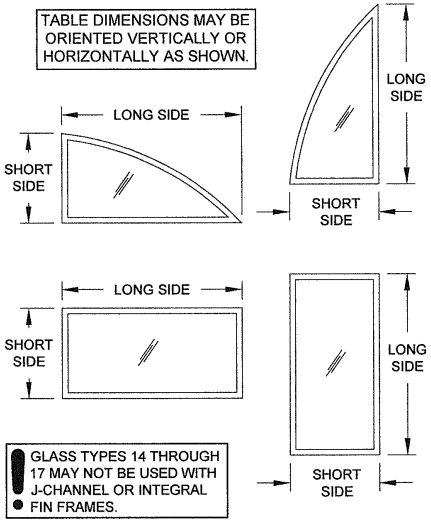


GLASS TYPES 14 THROUGH 17 MAY NOT BE USED WITH J-CHANNEL OR INTEGRAL FIN FRAMES.

TABLE 13:

| Window Design Pressure, (+/- psf) | | | | | | | | | | | | | | | | | | Use this table for Glass Type: | 17 |
|---|---|---|---|---|---|---|---|---|---|---|---|---|---|---|---|---|---|---|---|
| 3/16" T Cap - Airspace - 7/16" H/H with SG | | | | | | | | | | | | | | | | | | | |
| Window Dimensions | Long Side (in) | | | | | | | | | | | | | | | | | | |
| Short Side (in) | 77.76 | 79 | 81 | 84 | 86 | 87 | 91 | 94 | 96 | 99 | 104 | 107 | 111 | 118 | 120 | 125 | 136 | 144 | |
| 36 | +80/-110 | +80/-110 | +80/-110 | +80/-110 | +80/-110 | +80/-110 | +80/-110 | +80/-110 | +80/-110 | +80/-110 | +80/-110 | +80/-110 | +80/-110 | +80/-110 | +80/-110 | +80/-110 | +80/-110 | +80/-110 | |
| 40 | +80/-110 | +80/-110 | +80/-110 | +80/-110 | +80/-110 | +80/-110 | +80/-110 | +80/-110 | +80/-110 | +80/-110 | +80/-110 | +80/-110 | +80/-110 | +80/-110 | +80/-110 | +80/-110 | +80/-110 | +80/-110 | |
| 42 | +80/-110 | +80/-110 | +80/-110 | +80/-110 | +80/-110 | +80/-110 | +80/-110 | +80/-110 | +80/-110 | +80/-110 | +80/-110 | +80/-110 | +80/-110 | +80/-110 | +80/-110 | +80/-110 | +80/-110 | +80/-110 | |
| 44 | +80/-110 | +80/-110 | +80/-110 | +80/-110 | +80/-110 | +80/-110 | +80/-110 | +80/-110 | +80/-110 | +80/-110 | +80/-110 | +80/-110 | +80/-110 | +80/-110 | +80/-110 | +80/-110 | +80/-110 | | |
| 48 | +80/-110 | +80/-110 | +80/-110 | +80/-110 | +80/-110 | +80/-110 | +80/-110 | +80/-110 | +80/-110 | +80/-110 | +80/-110 | +80/-110 | +80/-110 | +80/-110 | +80/-110 | +80/-110 | | | |
| 50 | +80/-110 | +80/-110 | +80/-110 | +80/-110 | +80/-110 | +80/-110 | +80/-110 | +80/-110 | +80/-110 | +80/-110 | +80/-110 | +80/-110 | +80/-110 | +80/-110 | +80/-110 | | | | |
| 51 | +80/-110 | +80/-110 | +80/-110 | +80/-110 | +80/-110 | +80/-110 | +80/-110 | +80/-110 | +80/-110 | +80/-110 | +80/-110 | +80/-110 | +80/-110 | +80/-110 | | | | | |
| 54 | +80/-110 | +80/-110 | +80/-110 | +80/-110 | +80/-110 | +80/-110 | +80/-110 | +80/-110 | +80/-110 | +80/-110 | +80/-110 | +80/-110 | +80/-110 | | | | | | |
| 56 | +80/-110 | +80/-110 | +80/-110 | +80/-110 | +80/-110 | +80/-110 | +80/-110 | +80/-110 | +80/-110 | +80/-110 | +80/-110 | +80/-110 | | | | | | | |
| 58 | +80/-110 | +80/-110 | +80/-110 | +80/-110 | +80/-110 | +80/-110 | +80/-110 | +80/-110 | +80/-110 | +80/-110 | +80/-110 | | | | | | | | |
| 61 | +80/-110 | +80/-110 | +80/-110 | +80/-110 | +80/-110 | +80/-110 | +80/-110 | +80/-110 | +80/-110 | +80/-110 | | | | | | | | | |
| 63 | +80/-110 | +80/-110 | +80/-110 | +80/-110 | +80/-110 | +80/-110 | +80/-110 | +80/-110 | +80/-110 | | | | | | | | | | |
| 64 | +80/-110 | +80/-110 | +80/-110 | +80/-110 | +80/-110 | +80/-110 | +80/-110 | +80/-110 | | | | | | | | | | | |
| 66 | +80/-110 | +80/-110 | +80/-110 | +80/-110 | +80/-110 | +80/-110 | +80/-110 | | | | | | | | | | | | |
| 68 | +80/-110 | +80/-110 | +80/-110 | +80/-110 | +80/-110 | +80/-110 | | | | | | | | | | | | | |
| 70 | +80/-110 | +80/-110 | +80/-110 | +80/-110 | +80/-110 | | | | | | | | | | | | | | |
| 72 | +80/-110 | +80/-110 | +80/-110 | +80/-110 | | | | | | | | | | | | | | | |
| 74 | +80/-110 | +80/-110 | +80/-110 | | | | | | | | | | | | | | | | |
| 76 | +80/-110 | +80/-110 | | | | | | | | | | | | | | | | | |
| 77.76 | +80/-110 | | | | | | | | | | | | | | | | | | |

| MAX. O.C. SPACING IF ANCHORING THROUGH THE FRAME PER SHEETS 3 & 4 | MAX. O.C. SPACING IF ANCHORING THROUGH THE INTEGRAL FIN PER SHEET 4 |
|---|---|
| APPLIES TO B, C OR D ANCHORS (SEE TABLE 2) | NOT APPLICABLE |
| 9" | |

NOTES:
1) BUCK DIMENSIONS SHOWN.
2) FOR SIZES NOT SHOWN, ROUND UP TO THE NEXT AVAILABLE SHORT OR LONG DIMENSION.
3) FOR ARCHITECTURAL WINDOWS (SEE SHEET 2), FIND THE SMALLEST SQUARE WINDOW SIZE IN THE TABLE(S) ABOVE WHICH THE ARCHITECTURAL WINDOW WILL COMPLETELY FIT WITHIN.

**PRODUCT REVISED**
**as complying with the Florida Building Code**
**NOA-No. 20-0401.16**
**Expiration Date: 04/30/2025**
**By:** Manuel Perez
**Miami-Dade Product Control**

Revision:
C) REVISED 83" LONG SIDE DIM TO 84" IN TABLE 13. AK - 03/16/20


1070 TECHNOLOGY DRIVE
N. VENICE, FL 34275
(941)-480-1600
REGISTRATION #29296


| Series | Title | Desc. | Date | Drawn By | Rev. | DWG No. | Sheet | Scale |
|---|---|---|---|---|---|---|---|---|
| PW-5520 | VINYL FIXED WINDOW NOA (LM&SM) | DESIGN PRESSURE TABLES E | 9/9/14 | J ROSOWSKI | C | MD-5520.0 | 10 OF 11 | NTS |

ANTHONY LYNN MILLER LICENSE No. 58705 STATE OF FLORIDA PROFESSIONAL ENGINEER
3/19/20

A. LYNN MILLER, P.E.
P.E.# 58705

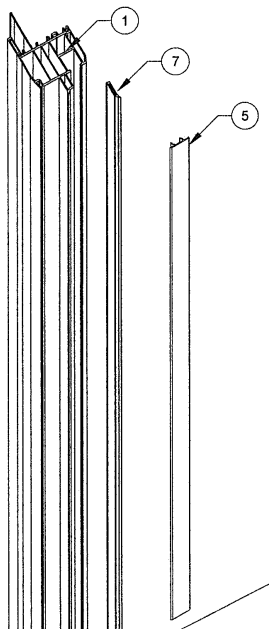


FRAME ASSEMBLY DETAILS

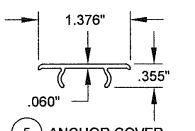


5 ANCHOR COVER

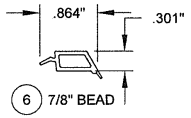


6 7/8" BEAD

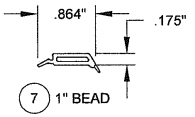


7 1" BEAD

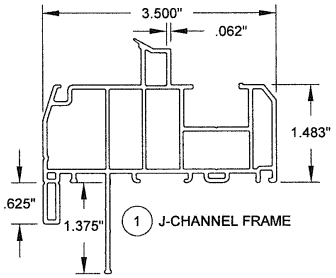


1 J-CHANNEL FRAME

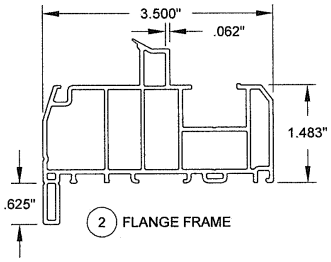


2 FLANGE FRAME

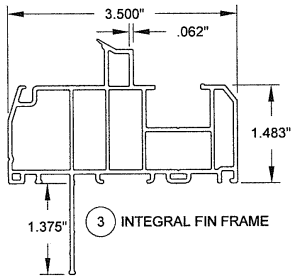


3 INTEGRAL FIN FRAME

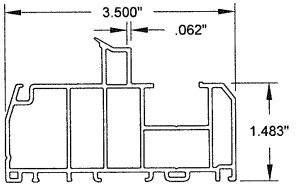


4 EQUAL LEG/BOX FRAME

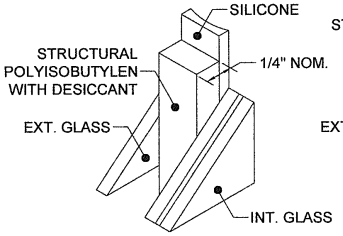


80 KODISPACE 4SG TPS

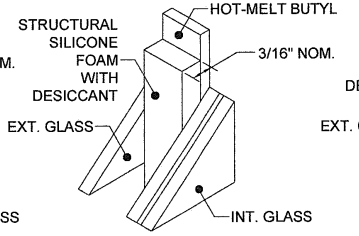


81 SUPER SPACER® NXT™

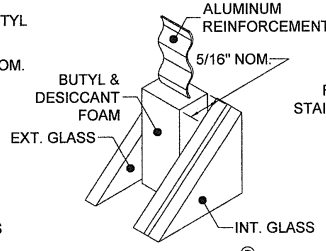


82 DURASEAL® SPACER

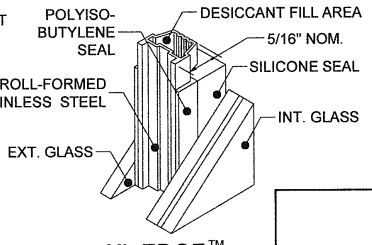


83 XL EDGE™ SPACER

TABLE 14:

| # | Part # | Description | Material |
|---|---|---|---|
| 1 | 620117 | J-channel Frame | PVC |
| 2 | 620118 | Flange Frame | PVC |
| 3 | 620119 | Integral Fin Frame | PVC |
| 4 | 620120 | Equal Leg/Box Frame | PVC |
| 5 | 620133 | Anchor Cover | PVC |
| 6 | 720136 | 7/8" Glazing Bead | PVC |
| 7 | 720135 | 1" Glazing Bead | PVC |
| 74 | | Backbedding, GE 7700 or Dow 791 or Dow 983 | Silicone |
| 78 | 71646N | Setting Block (7/8" x 1" x 1/8"), 85 +/- 5 duro. | EPDM |

| Part # | Description | Material |
|---|---|---|
| 80 | Kommerling 4SG TPS Spacer System | See this Sheet for Materials |
| 81 | Quanex Super Spacer nXT with Hot Melt Butyl | |
| 82 | Quanex Duraseal Spacer | |
| 83 | Cardinal XL Edge Spacer | |

REFERENCE TEST REPORTS: FTL-8717, 8968 & 8970

NOTES:
1) SOME PARTS NOT SHOWN FOR CLARITY.
2) J-CHANNEL FRAME SHOWN, PART #1. OTHER FRAME TYPES APPLY.
3) ITEMS # 8-73, 75-77 & 79 ARE NOT USED AND ARE NOT PART OF THIS APPROVAL.
4) ENERGI PVC TO BE LABELED FOR AAMA EXTRUDER CODE.

**PRODUCT REVISED**
as complying with the Florida Building Code
NOA No. 20-0401.16
Expiration Date: 04/30/2025
By: Manuel Perez
Miami-Dade Product Control

Revision
C) ADDED BACKBEDDING.
AK - 03/16/20

PGT®
REGISTRATION #29296
1070 TECHNOLOGY DRIVE
N. VENICE, FL 34275
(941)-480-1600

| | | | | | | | |
|---|---|---|---|---|---|---|---|
| Title | VINYL FIXED WINDOW NOA (LM&SM) | | | | | Date | 9/9/14 |
| Desc. | BOM & ASSEMBLY | | | | | Drawn By | J ROSOWSKI |
| Series | PW-5520 | Scale | NTS | Sheet | 11 OF 11 | DWG No. | MD-5520.0 Rev. C |

ANTHONY LYNN MILLER LICENSE No. 58705 STATE OF FLORIDA PROFESSIONAL ENGINEER
3/19/20
A. LYNN MILLER, P.E.
P.E.# 58705

**MIAMI–DADE** COUNTY, FLORIDA
**PRODUCT CONTROL SECTION**
11805 SW 26 Street, Room 208
Miami, Florida 33175-2474
T (786) 315-2590 F (786) 315-2599
www.miamidade.gov/building

**DEPARTMENT OF REGULATORY AND ECONOMIC RESOURCES (RER)**
**BOARD AND CODE ADMINISTRATION DIVISION**

# NOTICE OF ACCEPTANCE (NOA)

**PGT Industries, Inc.**
**1070 Technology Drive**
**North Venice, FL 34275**

## SCOPE:

This NOA is being issued under the applicable rules and regulations governing the use of construction materials. The documentation submitted has been reviewed and accepted by Miami-Dade County RER - Product Control Section to be used in Miami Dade County and other areas where allowed by the Authority Having Jurisdiction (AHJ).

This NOA shall not be valid after the expiration date stated below. The Miami-Dade County Product Control Section (In Miami-Dade County) and/or the AHJ (in areas other than Miami-Dade County) reserve the right to have this product or material tested for quality assurance purposes. If this product or material fails to perform in the accepted manner, the manufacturer will incur the expense of such testing and the AHJ may immediately revoke, modify, or suspend the use of such product or material within their jurisdiction. RER reserves the right to revoke this acceptance, if it is determined by Miami–Dade County Product Control Section that this product or material fails to meet the requirements of the applicable building code.

This product is approved as described herein, and has been designed to comply with the Florida Building Code, including the High Velocity Hurricane Zone.

**DESCRIPTION: Series "SH-5500" PVC Single Hung Window – L.M.I.**

**APPROVAL DOCUMENT:** Drawing No. **MD-SH5500-01** titled "Single Hung Window Installation - LM", sheets 1 through 13 of 13, dated 05/15/15, with revision **C** dated 03/10/20, prepared by manufacturer, signed and sealed by Anthony Lynn Miller, P.E., bearing the Miami-Dade County Product Control Revision stamp with the Notice of Acceptance number and expiration date by the Miami-Dade County Product Control Section.

**MISSILE IMPACT RATING: Large and Small Missile Impact Resistant**

**LABELING:** Each unit shall bear a permanent label with the manufacturer's name or logo, city, state, model/series, and following statement: "Miami-Dade County Product Control Approved", unless otherwise noted herein.

**RENEWAL** of this NOA shall be considered after a renewal application has been filed and there has been no change in the applicable building code negatively affecting the performance of this product.

**TERMINATION** of this NOA will occur after the expiration date or if there has been a revision or change in the materials, use, and/or manufacture of the product or process. Misuse of this NOA as an endorsement of any product, for sales, advertising or any other purposes shall automatically terminate this NOA. Failure to comply with any section of this NOA shall be cause for termination and removal of NOA.

**ADVERTISEMENT:** The NOA number preceded by the words Miami-Dade County, Florida, and followed by the expiration date may be displayed in advertising literature. If any portion of the NOA is displayed, then it shall be done in its entirety.

**INSPECTION:** A copy of this entire NOA shall be provided to the user by the manufacturer or its distributors and shall be available for inspection at the job site at the request of the Building Official.

This NOA **revises and renews NOA No. 17-0630.05** and consists of this page 1 and evidence pages E-1, E-2, E-3 and E-4, as well as approval document mentioned above.

The submitted documentation was reviewed by **Manuel Perez, P.E.**

MIAMI-DADE COUNTY APPROVED

7/16/20

**NOA No. 20-0401.03**
**Expiration Date: July 30, 2025**
**Approval Date: July 23, 2020**

**PGT Industries, Inc.**

## NOTICE OF ACCEPTANCE: EVIDENCE SUBMITTED

**1. EVIDENCE SUBMITTED UNDER PREVIOUS NOA's**

**A. DRAWINGS**

**1.** Manufacturer's die drawings and sections.
***(Submitted under NOA No. 15-0519.05)***

**2.** Drawing No. **MD-SH5500-01** titled "Single Hung Window Installation - LM", sheets 1 through 13 of 13, dated 05/15/15, with revision **B** dated 06/06/17, prepared by manufacturer, signed and sealed by Anthony Lynn Miller, P.E.
***(Submitted under NOA No. 17-0630.05)***

**B. TESTS**

**1.** Test reports on: 1) Uniform Static Air Pressure Test, Loading per FBC, TAS 202-94
2) Large Missile Impact Test per FBC, TAS 201-94
3) Cyclic Wind Pressure Loading per FBC, TAS 203-94
along with marked-up drawings and installation diagram of a PVC sliding glass door, a PVC fixed window and an aluminum sliding glass door, using: Kodispace 4SG TPS spacer system, Duraseal® spacer system, Super Spacer® NXT™ spacer system and XL Edge™ spacer system at insulated glass, prepared by Fenestration Testing Laboratory, Inc., Test Reports No. **FTL-8717, FTL-8968** and **FTL-8970**, dated 11/16/15, 06/07/16 and 06/02/16 respectively, all signed and sealed by Idalmis Ortega, P.E.
***(Submitted under NOA No. 16-0714.03)***

**2.** Test reports on: 1) Air Infiltration Test, per FBC, TAS 202-94
2) Uniform Static Air Pressure Test, Loading per FBC TAS 202-94
3) Water Resistance Test, per FBC, TAS 202-94
4) Forced Entry Test, per FBC 2411.3.2.1, and TAS 202-94
5) Large Missile Impact Test per FBC, TAS 201-94
6) Cyclic Wind Pressure Loading per FBC, TAS 203-94
along with marked-up drawings and installation diagram of a series 5500 PVC single hung window, prepared by Fenestration Testing Laboratory, Inc., Test Report No. **FTL-7964**, dated 11/15/14, signed and sealed by Idalmis Ortega, P.E.
***(Submitted under NOA No. 15-0519.05)***

**3.** Test reports on: 1) Uniform Static Air Pressure Test, Loading per FBC TAS 202-94
2) Large Missile Impact Test per FBC, TAS 201-94
3) Cyclic Wind Pressure Loading per FBC, TAS 203-94
along with marked-up drawings and installation diagram of a series 5500 PVC single hung window, prepared by Fenestration Testing Laboratory, Inc., Test Report No. **FTL-7966**, dated 08/21/14, signed and sealed by Idalmis Ortega, P.E.
***(Submitted under NOA No. 15-0519.05)***

Manuel Perez

**Manuel Perez, P.E.**
**Product Control Examiner**
**NOA No. 20-0401.03**
**Expiration Date: July 30, 2025**
**Approval Date: July 23, 2020**

## NOTICE OF ACCEPTANCE: EVIDENCE SUBMITTED

**1. EVIDENCE SUBMITTED UNDER PREVIOUS NOA's (CONTINUED)**

**C. CALCULATIONS**

**1.** Anchor verification calculations and structural analysis, complying with **FBC 5th Edition (2014)**, dated 05/15/15 and 08/29/17, prepared by manufacturer, signed and sealed by Anthony Lynn Miller, P.E.
***(Submitted under NOA No. 15-0519.05)***

**2.** Glazing complies with **ASTM E1300-09**

**D. QUALITY ASSURANCE**

**1.** Miami-Dade Department of Regulatory and Economic Resources (RER).

**E. MATERIAL CERTIFICATIONS**

**1.** Notice of Acceptance No. **16-1117.01** issued to **Kuraray America, Inc.** for their "**Trosifol® Ultraclear, Clear and Color PVB Glass Interlayers**" dated 01/19/17, expiring on 07/08/19.

**2.** Notice of Acceptance No. **14-0916.11** issued to **Kuraray America, Inc.** for their **"SentryGlas® (Clear and White) Glass Interlayers**" dated 06/25/15, expiring on 07/04/18.

**3.** Notice of Acceptance No. **16-0712.03** issued to ENERGI Fenestration Solutions USA for their "**White Rigid PVC Exterior Extrusions for Windows and Doors**" dated 08/10/17, expiring on 02/28/18.

**4.** Notice of Acceptance No. **16-0712.04** issued to ENERGI Fenestration Solutions USA, Inc. for their "**Bronze and Lighter Shades of Cap Coated White Rigid PVC Exterior Extrusions for Windows and Doors**" dated 09/15/16, expiring on 04/16/20.

**5.** Notice of Acceptance No. **16-0712.05** issued to ENERGI Fenestration Solutions USA, Inc. for their "**Performance Core Rigid PVC Exterior Extrusions for Windows and Doors**" dated 09/15/16, expiring on 04/16/20.

**F. STATEMENTS**

**1.** Statement letter of conformance, complying with **FBC 5th Edition (2014)** and **FBC 6th Edition (2017),** dated June 22, 2017, issued by manufacturer, signed and sealed by Anthony Lynn Miller, P.E.
***(Submitted under NOA No. 17-0630.05***

**2.** Statement letter of no financial interest, dated June 22, 2017, issued by manufacturer, signed and sealed by Anthony Lynn Miller, P.E.
***(Submitted under NOA No. 17-0630.05***

**3.** Proposal No. **16-0125** issued by the Product Control Section, dated March 09, 2016, signed by Ishaq Chanda, P.E.
***(Submitted under NOA No. 16-0714.03)***

**4.** Proposal issued by Product Control, dated 6/26/14 and revised on 8/19/14, signed by Jaime Gascon, P.E., Supervisor, Product Control Section.
***(Submitted under NOA No. 15-0519.05)***

Manuel Perez

**Manuel Perez, P.E.**
**Product Control Examiner**
**NOA No. 20-0401.03**
**Expiration Date: July 30, 2025**
**Approval Date: July 23, 2020**

## NOTICE OF ACCEPTANCE: EVIDENCE SUBMITTED

**1. EVIDENCE SUBMITTED UNDER PREVIOUS NOA's (CONTINUED)**

**G. OTHERS**

**1.** Notice of Acceptance No. **16-0714.03**, issued to PGT Industries, Inc. for their Series "5500" PVC Single Hung Window - L.M.I. approved on 08/18/16 and expiring on 07/30/20.

**2. NEW EVIDENCE SUBMITTED**

**A. DRAWINGS**

**1.** Drawing No. **MD-SH5500-01** titled "Single Hung Window Installation - LM", sheets 1 through 13 of 13, dated 05/15/15, with revision **C** dated 03/10/20, prepared by manufacturer, signed and sealed by Anthony Lynn Miller, P.E.

**B. TESTS**

**1.** Test reports on: 1) Air Infiltration Test, per FBC, TAS 202-94
2) Uniform Static Air Pressure Test, Loading per FBC, TAS 202-94
3) Water Resistance Test, per FBC, TAS 202-94
4) Large Missile Impact Test per FBC, TAS 201-94
5) Cyclic Wind Pressure Loading per FBC, TAS 203-94
6) Forced Entry Test, per ASTM F588 and TAS 202-94

along with marked-up drawings and installation diagram of all PGT Industries, Inc. representative units listed below and tested to qualify **Dowsil 791** and **Dowsil 983** silicones, prepared by Fenestration Testing Laboratory, Inc., Test Reports No.:
**FTL-7897,** PGT PW5520 PVC Fixed Window (unit 6 in proposal), dated 09/03/14
**FTL-20-2107.1,** PGT SGD780 Aluminum Sliding Glass Door (unit 7 in proposal)
**FTL-20-2107.2,** PGT CA740 Alum. Outswing Casement Window (unit 8 in proposal)
**FTL-20-2107.3,** PGT PW7620A Aluminum Fixed Window (unit 9 in proposal) and
**FTL-20-2107.4**, PGT PW7620A Aluminum Fixed Window (unit 10 in proposal) dated 07/13/20, all signed and sealed by Idalmis Ortega, P.E

**C. CALCULATIONS**

**1.** Anchor verification calculations and structural analysis, complying with **FBC 5th Edition (2014)**, dated 05/15/15, 08/29/17 and updated on 03/10/20 to the new **FBC 7th Edition (2020)**, prepared by manufacturer, signed and sealed by Anthony Lynn Miller, P.E.

**D. QUALITY ASSURANCE**

**1.** Miami-Dade Department of Regulatory and Economic Resources (RER)

Manuel Perez

**Manuel Perez, P.E.**
**Product Control Examiner**
**NOA No. 20-0401.03**
**Expiration Date: July 30, 2025**
**Approval Date: July 23, 2020**

## NOTICE OF ACCEPTANCE: EVIDENCE SUBMITTED

**2. NEW EVIDENCE SUBMITTED (CONTINUED)**

**E. MATERIAL CERTIFICATIONS**

**1.** Notice of Acceptance No. **19-0305.02** issued to **Kuraray America, Inc.** for their "**Trosifol® Ultraclear, Clear and Color PVB Glass Interlayers**" dated 05/09/19, expiring on 07/08/24.

**2.** Notice of Acceptance No. **18-0725.11** issued to **Kuraray America, Inc.** for their "**Kuraray SentryGlas® Xtra™ (SGX™) Clear Glass Interlayer**" dated 05/23/19, expiring on 05/23/24.

**3.** Notice of Acceptance No. **18-0122.02,** issued to **ENERGI Fenestration Solutions USA, Inc.**, for their **White Rigid PVC Exterior Extrusions for Windows and Doors**, approved on 03/08/18, expiring on 02/28/23.

**4.** Notice of Acceptance No. **18-1217.15,** issued to **ENERGI Fenestration Solutions USA, Inc.**, for their **Bronze and Lighter Shades of Cap Coated Rigid PVC Exterior Extrusions for Windows and Doors**, approved on 01/17/19, expiring on 04/16/20.

**5.** Notice of Acceptance No. **18-1217.16,** issued to **ENERGI Fenestration Solutions USA, Inc.**, for their **Performance Core Rigid PVC Exterior Extrusions for Windows and Doors**, approved on 01/17/19, expiring on 02/04/21.

**F. STATEMENTS**

**1.** Statement letter of conformance, complying with **FBC 6th Edition (2017)** and the **FBC 7th Edition (2020)**, dated March 10, 2020, issued by manufacturer, signed and sealed by Anthony Lynn Miller, P.E.

**2.** Statement letter of no financial interest, dated March 10, 2020, issued by manufacturer, signed and sealed by Anthony Lynn Miller, P.E.

**3.** Proposal No. **19-1155 TP** issued by the Product Control Section, dated January 10, 2020, signed by Ishaq Chanda, P.E.

**G. OTHERS**

**1.** Notice of Acceptance No. **17-0630.05**, issued to PGT Industries, Inc. for their Series "SH-5500" PVC Single Hung Window - L.M.I. approved on 11/30/17 and expiring on 07/30/20.

Manuel Perez

**Manuel Perez, P.E.**
**Product Control Examiner**
**NOA No. 20-0401.03**
**Expiration Date: July 30, 2025**
**Approval Date: July 23, 2020**

| DESIGN PRESSURE RATING | IMPACT RATING |
|---|---|
| VARIES PER REINFORCEMENT LEVEL, SEE SHEETS 6-7 | LARGE & SMALL MISSILE IMPACT RESISTANT |

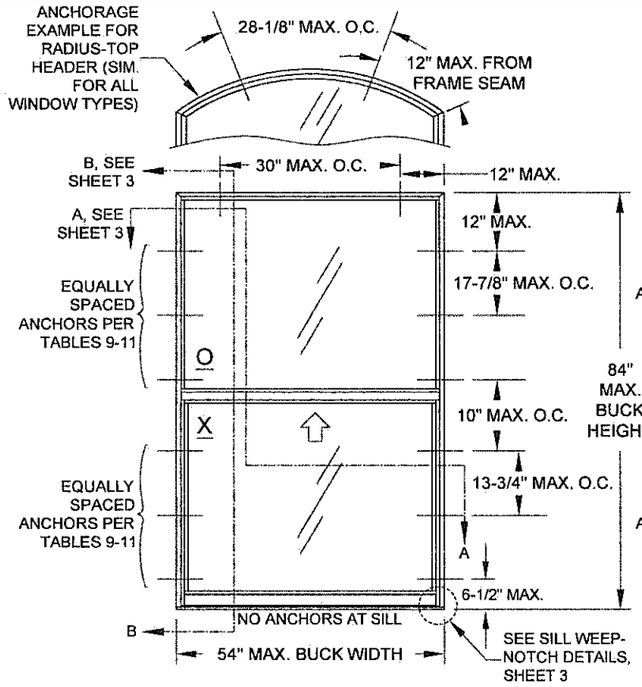


ELEVATION FOR TYP. EQUAL LEG FRAME
SHOWN WITH EQUAL-LITE CONFIGURATION

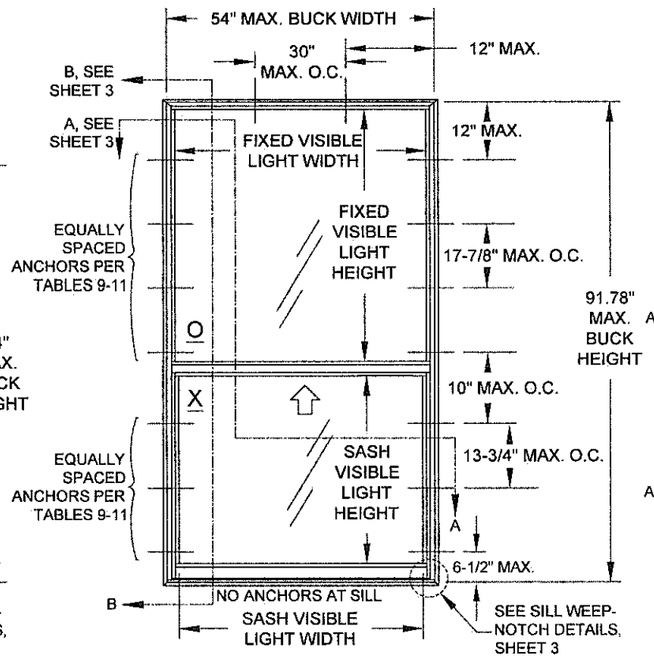


ELEVATION FOR TYP. FLANGE FRAME
SHOWN WITH ORIEL/PROVIEW CONFIGURATION

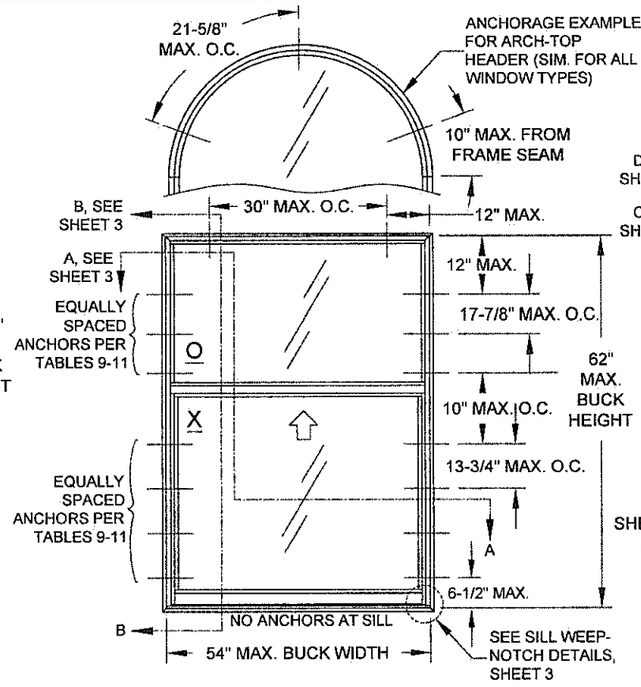


ELEVATION FOR TYP. FLANGE FRAME
SHOWN WITH STANDARD COTTAGE CONFIGURATION
FOR CUSTOM COTTAGE CONFIGURATION UP TO
75" HEIGHT SEE TABLES 4-11

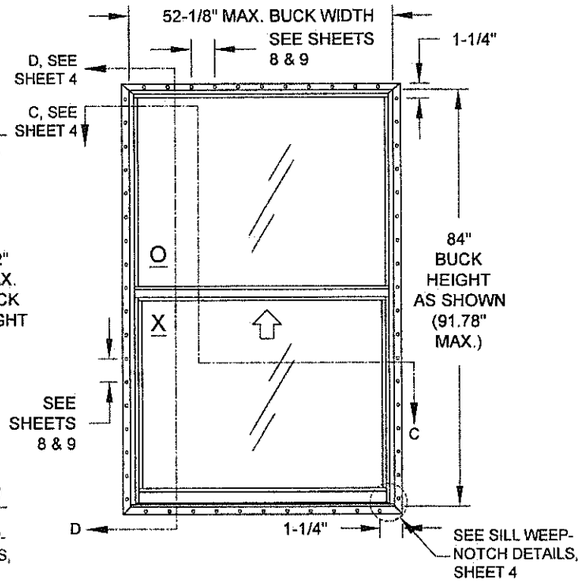


ELEVATION FOR TYP. FIN OR J-CHANNEL FRAME
SHOWN WITH EQUAL-LITE CONFIGURATION
ANCHORED THROUGH THE NAIL-FIN
(SIMILAR ANCHOR DIMENSIONS FOR OTHER CONFIGURATIONS)

## GENERAL NOTES: SERIES 5500 IMPACT RESISTANT SINGLE HUNG WINDOW

1) THIS PRODUCT HAS BEEN DESIGNED & TESTED TO COMPLY WITH THE REQUIREMENTS OF THE FLORIDA BUILDING CODE, INCLUDING THE HIGH VELOCITY HURRICANE ZONE (HVHZ).
2) SHUTTERS ARE NOT REQUIRED WHEN USED IN WIND-BORNE DEBRIS REGIONS. FOR INSULATED GLASS INSTALLATIONS ABOVE 30' IN THE HVHZ, THE OUTBOARD LITE (CAP) MUST TEMPERED.
3) FOR MASONRY APPLICATIONS IN MIAMI-DADE COUNTY, USE ONLY MIAMI-DADE COUNTY APPROVED MASONRY ANCHORS. MATERIALS USED FOR ANCHOR EVALUATIONS WERE SOUTHERN PINE, ASTM C90 CONCRETE MASONRY UNITS AND CONCRETE WITH MIN. KSI PER ANCHOR TYPE.
4) ALL WOOD BUCKS LESS THAN 1-1/2" THICK ARE TO BE CONSIDERED 1X INSTALLATIONS. 1X WOOD BUCKS ARE OPTIONAL IF UNIT IS INSTALLED DIRECTLY TO SUBSTRATE. WOOD BUCKS DEPICTED AS 2X ARE 1-1/2" THICK OR GREATER. 1X AND 2X BUCKS (WHEN USED) SHALL BE DESIGNED AND SECURED TO PROPERLY TRANSFER LOADS TO THE STRUCTURE. WOOD BUCK DESIGN AND INSTALLATION IS THE RESPONSIBILITY OF THE ENGINEER, (EOR) OR ARCHITECT OF RECORD, (AOR).
5) ANCHOR EMBEDMENT TO BASE MATERIAL SHALL BE BEYOND WALL DRESSING OR STUCCO. USE ANCHORS OF SUFFICIENT LENGTH TO ACHIEVE REQUIRED MIN. EMBEDMENT. INST. ANCHORS SHOULD BE SEALED. OVERALL SEALING/FLASHING STRATEGY FOR WATER RESISTANCE OF INSTALLATION SHALL BE DONE BY OTHERS AND IS BEYOND THE SCOPE OF THESE INSTRUCTIONS.
6) 1/4" MAX. SHIMS ARE REQUIRED AT EACH ANCHOR LOCATION WHERE THE PRODUCT IS NOT FLUSH TO THE SUBSTRATE. USE SHIMS CAPABLE OF TRANSFERRING APPLIED LOADS.
7) DESIGN PRESSURES:
   A. NEGATIVE DESIGN LOADS BASED ON STRUCTURAL & CYCLE TESTING AND GLASS PER ASTM E1300.
   B. POSITIVE DESIGN LOADS BASED ON WATER TEST PRESSURE, STRUCTURAL & CYCLE TESTING AND GLASS PER ASTM E1300.
   C. DESIGN LOADS ARE BASED ON ALLOWABLE STRESS DESIGN, ASD.
8) THE ANCHORAGE METHODS SHOWN HAVE BEEN DESIGNED TO RESIST THE WINDLOADS CORRESPONDING TO THE REQUIRED DESIGN PRESSURE. THE 33-1/3% STRESS INCREASE HAS NOT BEEN USED IN THE DESIGN OF THIS PRODUCT. THE 1.6 LOAD DURATION FACTOR WAS USED FOR THE EVALUATION OF ANCHORS INTO WOOD. ANCHORS THAT COME INTO CONTACT WITH OTHER DISSIMILAR MATERIALS SHALL MEET THE REQUIREMENTS OF THE FLORIDA BUILDING CODE FOR CORROSION RESISTANCE.
9) METAL SUBSTRATE TO MEET MIN. STRENGTH AND THICKNESS REQUIREMENTS PER CURRENT FLORIDA BUILDING CODE AND TO BE REVIEWED BY THE AUTHORITY HAVING JURISDICTION.
10) REFERENCES: TEST REPORTS FTL-7964 & 7966; ELCO ULTRACON NOA; DEWALT ULTRACON+ NOA;ELCO/DEWALT CRETEFLEX NOA; ELCO/DEWALT AGGRE-GATOR NOA; ENERGI WINDOW AND DOOR PROFILES, LTD WHITE & BRONZE/LIGHTER SHADES OF CAP COATED PVC EXTRUSION NOA'S;
NATIONAL DESIGN SPECIFICATION FOR WOOD CONSTRUCTION, ANSI/AF&PA NDS & ALUMINUM DESIGN MANUAL
11) APPLICABLE EGRESS REQUIREMENTS TO BE REVIEWED BY BUILDING OFFICIAL.

## USER INSTRUCTIONS:

1) DETERMINE THE SITE SPECIFIC, WINDOW OPENING'S DESIGN PRESSURE REQUIREMENT FROM ASCE 7.
2) DETERMINE THE MOST SUITABLE ANCHOR GROUP FROM TABLES 2 OR 3 ACCORDING TO THE INSTALLATION CONDITIONS.
3) KNOWING YOUR GLAZING OPTION (TABLE 1), WINDOW CONFIGURATION AND SIZE, DETERMINE YOUR WINDOW'S DESIGN PRESSURE FROM TABLES 4-8. IT MUST EQUAL OR EXCEED THE DESIGN PRESSURE REQUIREMENT FOR THE WINDOW OPENING OBTAINED IN STEP 1.
4) DETERMINE THE ANCHOR QUANTITY FROM TABLES 9-11. VERIFY THE ANCHOR/SUBSTRATE WILL MEET REQUIREMENTS FOR YOUR OPENING'S CONDITION FROM TABLES 2 OR 3, AND THAT ALL MIN. REQUIREMENTS FROM THIS SHEET-SET ARE MET.
5) INSTALL AS PER SHEET 3 FOR THRU-FRAME INSTALLATION OR SHEET 4 FOR INTEGRAL FIN INSTALLATION.

NOTE:DESIGN PRESSURE RATING DETERMINATION IS THE SAME PROCESS FOR ALL FRAME TYPES (J-CHANNEL, FLANGE, INTEGRAL FIN OR EQUAL LEG/BOX).


GENERAL NOTES..... 1
ELEVATIONS..... 1
FRAME, GLASS & ANCHOR OPTIONS..... 2
INSTALLATION, FLANGE & EQUAL LEG/BOX..... 3
INSTALLATION, INTEGRAL FIN & J-CHANNEL... 4
GLAZING DETAILS..... 5
DESIGN PRESSURES..... 6-7
ANCHOR QUANTITIES..... 8-10
EXTRUSION PROFILES..... 11
ASSEMBLY & PARTS LIST..... 12-13


CODES / STANDARDS USED:

- 2020 FLORIDA BUILDING CODE (FBC), 7TH EDITION
- 2017 FLORIDA BUILDING CODE (FBC), 6TH EDITION
- ASTM E1300-09
- ANSI/AF&PA NDS-2018 FOR WOOD CONSTRUCTION
- ALUMINUM DESIGN MANUAL, ADM-2015
- AISI S100-16
- AISC 360-16

ANTHONY LYNN MILLER LICENSE No. 58705 STATE OF FLORIDA PROFESSIONAL ENGINEER
3/13/20
A. LYNN MILLER, P.E.
P.E.# 58705


1070 TECHNOLOGY DRIVE
N. VENICE, FL 34275
(941)-480-1600
REGISTRATION #29296


**PRODUCT REVISED**
**as complying with the Florida Building Code**
**NOA-No. 20-0401.03**
**Expiration Date: 07/30/2025**
**By:** Manuel Perez
**Miami-Dade Product Control**

| | |
|---|---|
| Revision: C) UPDATED TO FBC 2020, REVISED ANCHOR TYPE TABLE. AK - 03/10/20 | |
| Description: GENERAL NOTES & ELEVATION | Drawn By: J ROSOWSKI |
| Title: SINGLE HUNG WINDOW INSTALLATION - LM | Date: 05/15/15 |
| Series/Model: SH-5500 | Scale: NTS |
| Sheet: 1 OF 13 | Drawing No. MD-SH5500-01 |
| Rev: C | |

TABLE 1: ALLOWABLE GLASS TYPES

| Glass Type | Description (Listed from Exterior to Interior) | Design Pressure | |
|---|---|---|---|
| | | Table # | Sheet # |
| 5 | 7/8" Laminated I.G.: 1/8" A Exterior Cap + 7/16" Air Space + 5/16" Laminated; (2) Lites of 1/8" A Glass with .090" PVB Interlayer | 4, 5 | 6 |
| 6 | 7/8" Laminated I.G.: 1/8" T Exterior Cap + 7/16" Air Space + 5/16" Laminated; (2) Lites of 1/8" A Glass with .090" PVB Interlayer | 4, 6 | 6 |
| 7 | 7/8" Laminated I.G.: 3/16" A Exterior Cap + 3/8" Air Space + 5/16" Laminated; (2) Lites of 1/8" A Glass with .090" PVB Interlayer | 4, 6 | 6 |
| 8 | 7/8" Laminated I.G.: 3/16" T Exterior Cap + 3/8" Air Space + 5/16" Laminated; (2) Lites of 1/8" A Glass with .090" PVB Interlayer | 4, 6 | 6 |
| 9 | 7/8" Laminated I.G.: 1/8" A Exterior Cap + 7/16" Air Space + 5/16" Laminated; (2) Lites of 1/8" H Glass with .090" SG Interlayer | 7 | 7 |
| 10 | 7/8" Laminated I.G.: 1/8" T Exterior Cap + 7/16" Air Space + 5/16" Laminated; (2) Lites of 1/8" H Glass with .090" SG Interlayer | 7 | 7 |
| 11 | 7/8" Laminated I.G.: 3/16" A Exterior Cap + 3/8" Air Space + 5/16" Laminated; (2) Lites of 1/8" H Glass with .090" SG Interlayer | 7 | 7 |
| 12 | 7/8" Laminated I.G.: 3/16" T Exterior Cap + 3/8" Air Space + 5/16" Laminated; (2) Lites of 1/8" H Glass with .090" SG Interlayer | 7 | 7 |
| 13 | 7/8" Laminated I.G.: 1/8" A Exterior Cap + 5/16" Air Space + 7/16" Laminated; (2) Lites of 3/16" A Glass with .090" SG Interlayer | 8 | 7 |
| 14 | 7/8" Laminated I.G.: 1/8" T Exterior Cap + 5/16" Air Space + 7/16" Laminated; (2) Lites of 3/16" A Glass with .090" SG Interlayer | 8 | 7 |
| 15 | 7/8" Laminated I.G.: 3/16" A Exterior Cap + 1/4" Air Space + 7/16" Laminated; (2) Lites of 3/16" A Glass with .090" SG Interlayer | 7 | 7 |
| 16 | 7/8" Laminated I.G.: 3/16" T Exterior Cap + 1/4" Air Space + 7/16" Laminated; (2) Lites of 3/16" A Glass with .090" SG Interlayer | 7 | 7 |

TABLE 2: ALLOWABLE ANCHORS THROUGH THE FRAME

| Group | Anchor | Substrate | Min. Edge Distance | Min. Embedment* |
|---|---|---|---|---|
| A | #10 SMS (steel, 18-8 S.S. or 410 S.S.) | P.T. Southern Pine (SG=0.55) | 7/16" | 1-3/8" |
| | | Steel, A36* | 3/8" | 0.050" |
| | | Steel Stud, A653 Gr. 33* | 3/8" | 0.0451" (18 Ga.) |
| | | Aluminum, 6063-T5* | 3/8" | 0.050" |
| | 3/16" steel Ultracon or Ultracon+ | P.T. Southern Pine (SG=0.55) | 7/16" | 1-3/8" |
| | | Concrete (min. 3 ksi) | 1" | 1-3/8" |
| | 3/16" steel Ultracon | Ungrouted CMU, (ASTM C-90) | 2-1/2" | 1-1/4" |
| | 3/16" steel Ultracon+ | Ungrouted CMU, (ASTM C-90) | 1" | 1-1/4" |
| B | #12 SMS (steel, 18-8 S.S. or 410 S.S.) | P.T. Southern Pine (SG=0.55) | 9/16" | 1-3/8" |
| | | Steel, A36* | 3/8" | 0.050" |
| | | Steel Stud, A653 Gr. 33* | 3/8" | 0.0451" (18 Ga.) |
| | | Aluminum, 6063-T5* | 3/8" | 0.063" |
| | 1/4" steel Ultracon or Ultracon+ | P.T. Southern Pine (SG=0.55) | 1" | 1-3/8" |
| | 1/4" steel Creteflex | P.T. Southern Pine (SG=0.55) | 1" | 1-3/8" |
| | 1/4" steel Aggre-Gator | P.T. Southern Pine (SG=0.55) | 1" | 1-3/8" |
| C | 1/4" steel Ultracon | Concrete (min. 2.85 ksi) | 1" | 1-3/4" |
| | | Ungrouted CMU, (ASTM C-90) | 2-1/2" | 1-1/4" |
| | 1/4" steel Ultracon+ | Concrete (min. 3 ksi) | 1-3/16" | 1-3/4" |
| | | Ungrouted CMU, (ASTM C-90) | 1" | 1-1/4" |
| | 1/4" steel Creteflex | Concrete (min. 3.35 ksi) | 1" | 1-3/4" |
| D | 1/4" steel Ultracon | Concrete (min. 2.85 ksi) | 2-1/2" | 1-3/4" |
| | 1/4" steel Ultracon+ | Concrete (min. 3 ksi) | 2-1/2" | 1-3/4" |
| | 1/4" steel Ultracon+ | Ungrouted CMU, (ASTM C-90) | 2-1/2" | 1-1/4" |
| | 1/4" steel Creteflex | Concrete (min. 3.35 ksi) | 2-1/2" | 1-3/4" |
| | | Ungrouted CMU, (ASTM C-90) | 2-1/2" | 1-1/4" |
| | 1/4" steel Aggre-Gator | Concrete (min. 3.275 ksi) | 1-1/2" | 1-3/8" |
| | | Grouted CMU, (ASTM C-90) | 2" | 2" |

* MIN. OF 3 THREADS BEYOND THE METAL SUBSTRATE.

"UNGROUTED CMU" VALUES MAY BE USED FOR GROUTED CMU APPLICATIONS.

TABLE 3: ALLOWABLE ANCHORS THROUGH THE INTEGRAL FIN

| Group | Anchor | Substrate | Min. Edge Distance | Min. Embedment* |
|---|---|---|---|---|
| E | 2-1/2" x .131" Common Nail | P.T. Southern Pine (SG=.55) | 3/8" | 2-7/16" |
| F | 2-1/2" Ring-shank Roofing Nail | P.T. Southern Pine (SG=.55) | 3/8" | 2-7/16" |
| | #10 Trusshead SMS (steel, 18-8 S.S. or 410 S.S.) | P.T. Southern Pine (SG=.55) | 1/2" | 1-3/8" |
| | | Aluminum, 6063-T5* | 3/8" | 0.050" |
| | | Steel Stud, Gr. 33* | 3/8" | 0.0451" (18 Ga.) |
| | | Steel, A36* | 3/8" | 0.050" |
| | #12 SMS (steel, 18-8 S.S. or 410 S.S.) | P.T. Southern Pine (SG=.55) | 9/16" | 1-3/8" |
| | | Aluminum, 6063-T5* | 3/8" | 0.063" |
| | | Steel Stud, Gr. 33* | 3/8" | 0.050" |
| | | Steel, A36* | 3/8" | 0.050" |

* MIN. OF 3 THREADS BEYOND THE METAL SUBSTRATE.

GLASS TYPES 5, 7, 9, 11, 13 & 15 MAY NOT BE USED IN THE HVHZ ABOVE 30'.

| Frame Types (see Fig B) | Glass Options (see Table 1) | Frame Configs. (see Fig A) | Frame Shapes (see Fig C) | Installation Options that may be used | |
|---|---|---|---|---|---|
| Flange (#2) | 5 - 16 | Equal-Lite, Oriel/Proview & Cottage | Square/Rect., Arch-Top & Radius-Top | Through the frame of the window..... | ....into 2X Wood Frame/Buckstrip - sheet 3, option 1 |
| | | | | | ....into Concrete/CMU - sheet 3, option 2 |
| | | | | | ....through 1X Buckstrip into Concrete/CMU - sheet 3, option 3 |
| | | | | | ....into Metal - sheet 3, option 4 |
| Box / Equal-Leg (#4) | 5 - 16 | Equal-Lite, Oriel/Proview & Cottage | Square/Rect., Arch-Top & Radius-Top | Through the frame of the window..... | ....into 2X Wood Frame/Buckstrip - sheet 3, option 1 |
| | | | | | ....into Concrete/CMU - sheet 3, option 2 |
| | | | | | ....through 1X Buckstrip into Concrete/CMU - sheet 3, option 3 |
| | | | | | ....into Metal - sheet 3, option 4 |
| J-Channel (#1) | 5 - 8 | Equal-Lite, Oriel/Proview & Cottage | Square/Rect., Arch-Top & Radius-Top | Through the integral fin..... | ....into 2X Wood Frame/Buckstrip - sheet 4, option 5 |
| | | | | | ....into Metal - sheet 4, option 7 |
| | | | | Through the frame of the window..... | ....into 2X Wood Frame/Buckstrip - sheet 4, option 6 |
| | | | | | ....into Metal - sheet 4, option 8 |
| Integral Fin (#3) | 5 - 8 | Equal-Lite, Oriel/Proview & Cottage | Square/Rect., Arch-Top & Radius-Top | Through the integral fin..... | ....into 2X Wood Frame/Buckstrip - sheet 4, option 5 |
| | | | | | ....into Metal - sheet 4, option 7 |
| | | | | Through the frame of the window..... | ....into 2X Wood Frame/Buckstrip - sheet 4, option 6 |
| | | | | | ....into Metal - sheet 4, option 8 |

FIGURE A: FRAME CONFIGURATIONS

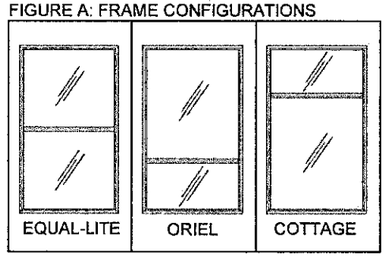


FIGURE B: FRAME TYPES

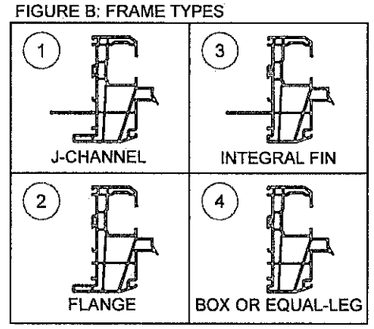


"A" = ANNEALED
"H" = HEAT STRENGTHENED
"T" = TEMPERED
"PVB" = .090" TROSIFOL® PVB BY KURARAY AMERICA, INC.

"SG" = .090" SENTRYGLAS® INTERLAYER BY KURARAY AMERICA, INC.

FIGURE C: FRAME SHAPES

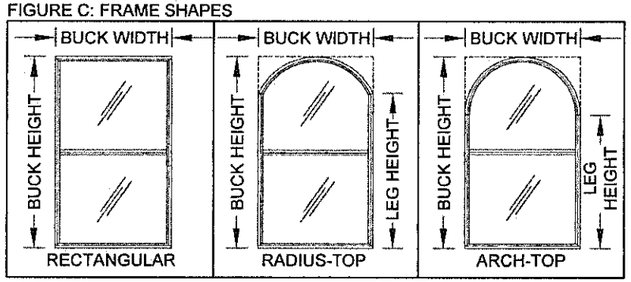


WINDOW SHAPES AS ABOVE OR SIMILAR ARE APPROVED. SHAPES MAY BE USED BY INSCRIBING THE SHAPE IN A BLOCK AND OBTAINING DESIGN PRESSURES AND ANCHORAGE FOR THAT BLOCK SIZE FROM THE TABLES ON SHEETS 6-10.

| Material | Min. $F_y$ | Min. $F_u$ |
|---|---|---|
| Steel Screw | 92 ksi | 120 ksi |
| 18-8 Screw | 60 ksi | 95 ksi |
| 410 Screw | 90 ksi | 110 ksi |
| Elco/DeWalt Aggre-Gator® | 57 ksi | 96 ksi |
| Elco UltraCon® | 155 ksi | 177 ksi |
| 3/16" DeWalt UltraCon+® | 117 ksi | 164 ksi |
| 1/4" DeWalt UltraCon+® | 148 ksi | 164 ksi |
| 410 SS Elco/Dewalt CreteFlex® | 127.4 ksi | 189.7 ksi |
| 6063-T5 Aluminum | 16 ksi | 22 ksi |
| A36 Steel | 36 ksi | 58 ksi |
| Gr. 33 Steel Stud | 33 ksi | 45 ksi |

ANTHONY LYNN MILLER LICENSE No. 58705 STATE OF FLORIDA PROFESSIONAL ENGINEER
3/13/20
A. LYNN MILLER, P.E.
P.E.# 58705


1070 TECHNOLOGY DRIVE
N. VENICE, FL 34275
(941)-480-1600

REGISTRATION #29296


**PRODUCT REVISED**
**as complying with the Florida Building Code**
**NOA-No. 20-0401.03**
**Expiration Date: 07/30/2025**
**By:** Manuel Perez
**Miami-Dade Product Control**

| | |
|---|---|
| Revision: C) REVISED ANCHOR TYPE TABLE. AK - 03/10/20 | |
| Description: GLASS/ANCHORS/FRAME OPTIONS | Drawn By: J ROSOWSKI |
| Title: SINGLE HUNG WINDOW INSTALLATION - LM | Date: 05/15/15 |
| Series/Model: SH-5500 | Scale: NTS |
| Sheet: 2 OF 13 | Drawing No. MD-SH5500-01 |
| Rev: C | |

# INSTALLATION DETAILS FOR FLANGE & EQUAL-LEG/BOX FRAMES

## INSTALLATION OPTION 1

ANCHORED THROUGH FRAME INTO 2X WOOD FRAME OR BUCKSTRIP. SEE NOTE 2, THIS SHEET.

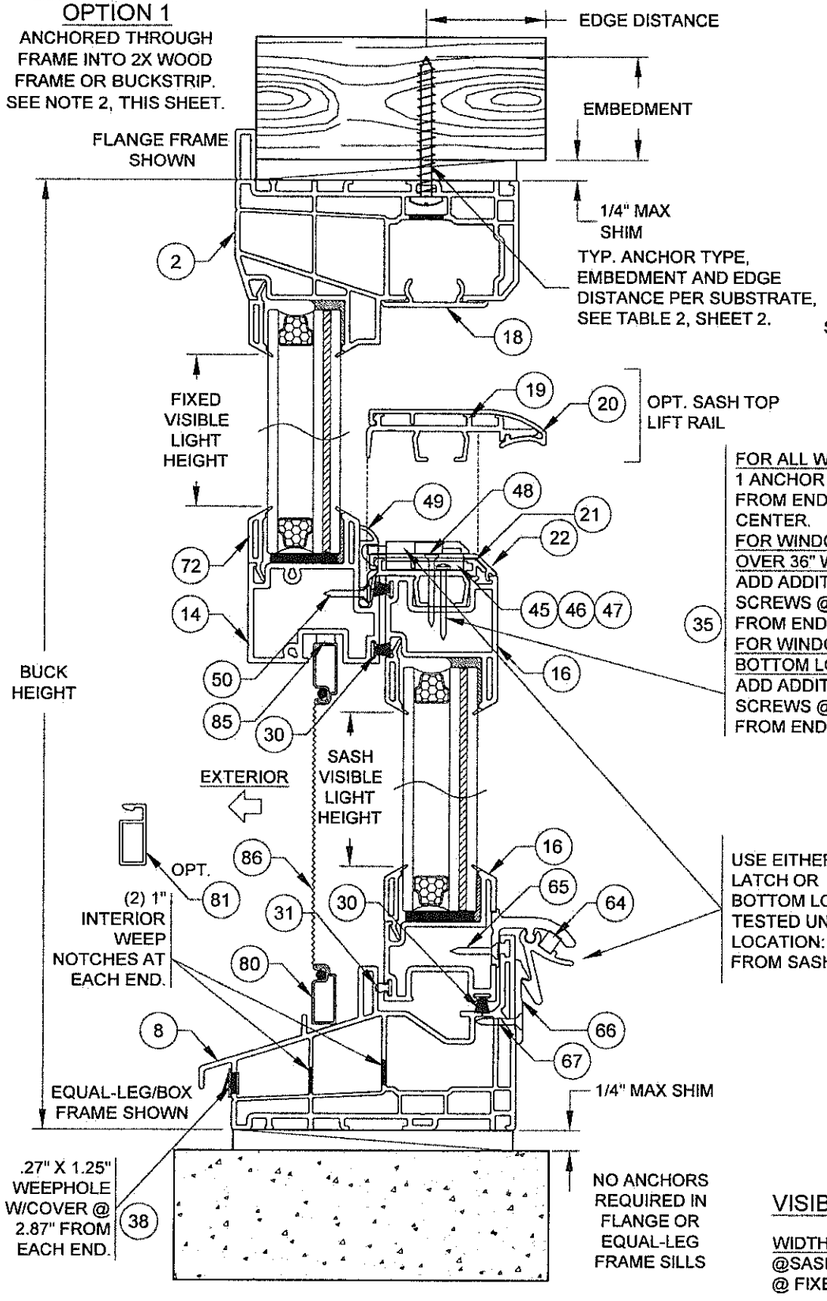


FOR ALL WINDOWS: 1 ANCHOR @ 3.55" FROM END AND AT CENTER.
FOR WINDOWS OVER 36" WIDE: ADD ADDITIONAL SCREWS @16-3/8" FROM END.
FOR WINDOWS WITH BOTTOM LOCKS: ADD ADDITIONAL SCREWS @ 8-3/8" FROM END.

USE EITHER LATCH OR BOTTOM LOCK. TESTED UNIT LOCATION: 6-5/8" FROM SASH END.

## VERTICAL SECTION B-B

## INSTALLATION OPTION 2

ANCHORED THROUGH FRAME DIRECTLY INTO CONCRETE/CMU.

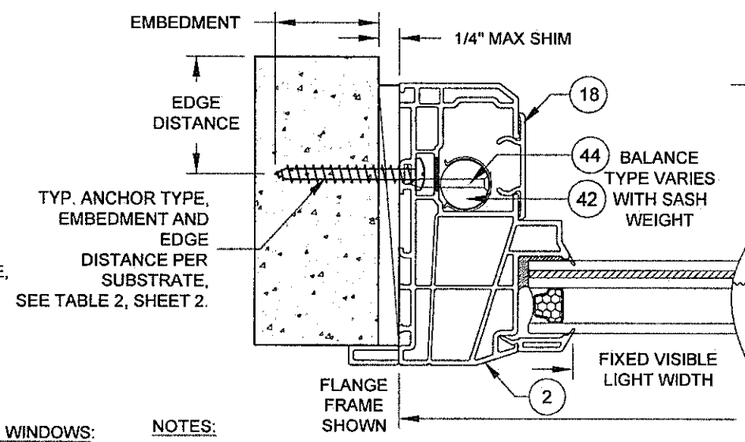


## INSTALLATION OPTION 3

ANCHORED THROUGH FRAME AND 1X BUCKSTRIP INTO CONCRETE/CMU. SEE NOTE 2, THIS SHEET.

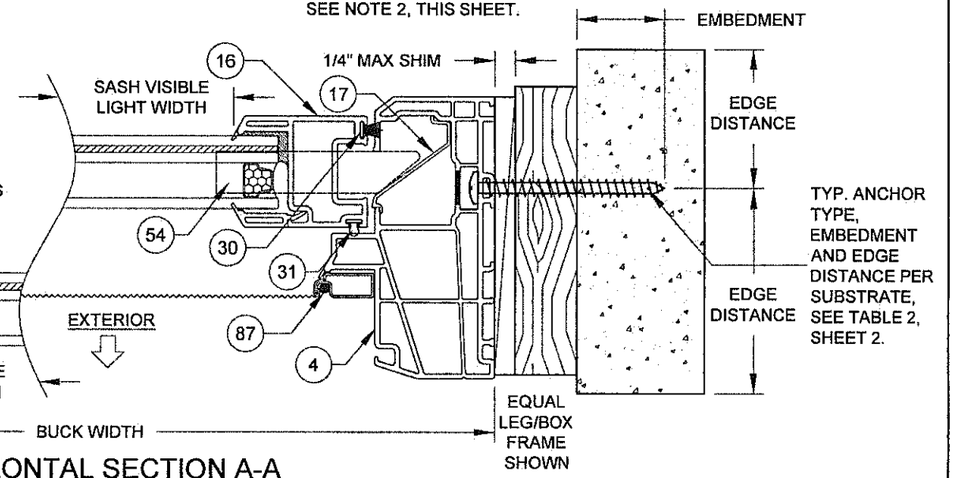


## HORIZONTAL SECTION A-A

NOTES:

1) USE ONLY SUBSTRATE-APPROPRIATE ANCHORS LISTED ON TABLE 2, SHEET 2. FOLLOW EMBEDMENT AND EDGE DISTANCE LIMITS. ANY INSTALLATION OPTION SHOWN MAY BE USED ON ANY SIDE OF THE WINDOW.

2) MASONRY ANCHORS MAY BE USED INTO WOOD AS PER TABLE 2, SHEET 2. ALL WOOD BUCKS LESS THAN 1-1/2" THICK ARE TO BE CONSIDERED 1X INSTALLATIONS. 1X WOOD BUCKS ARE OPTIONAL IF UNIT IS INSTALLED DIRECTLY TO SUBSTRATE. WOOD BUCKS DEPICTED AS 2X ARE 1-1/2" THICK OR GREATER. 1X AND 2X BUCKS (WHEN USED) SHALL BE DESIGNED TO PROPERLY TRANSFER LOADS TO THE STRUCTURE. WOOD BUCK DESIGN AND INSTALLATION IS THE RESPONSIBILITY OF THE ENGINEER OR ARCHITECT OF RECORD.

3) VISIBLE LIGHT WIDTH OR HEIGHT (ALSO REFERRED TO AS DAYLIGHT OPENING) IS MEASURED FROM BEADING TO BEADING.

DADE APPROVED MULLION, FBC COMPLIANT ALUMINUM/STEEL FRAMING OR STEEL STUD. MAY BE VERTICAL OR HORIZONTAL. SEE SUBSTRATE PROPERTIES, TABLE 2, SHEET 2.

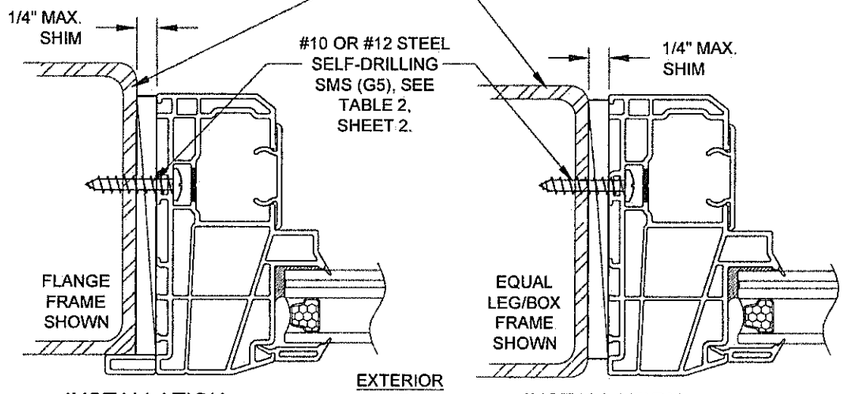


INSTALLATION OPTION 4
ANCHORED THROUGH FRAME INTO METAL

INSTALLATION OPTION 4
ANCHORED THROUGH FRAME INTO METAL

## VISIBLE LIGHT FORMULAS

WIDTH
@SASH: BUCK WIDTH - 6-1/2"
@ FIXED LITE: BUCK WIDTH - 4-3/8"

HEIGHT (EQUAL-LITE)
BUCK HEIGHT/2 - 3-15/16"

ANTHONY LYNN MILLER LICENSE No. 58705 STATE OF FLORIDA PROFESSIONAL ENGINEER
3/13/20
A. LYNN MILLER, P.E.
P.E.# 58705


PGT®
1070 TECHNOLOGY DRIVE
N. VENICE, FL 34275
(941)-480-1600
REGISTRATION #29296


**PRODUCT REVISED**
as complying with the Florida Building Code
NOA-No. 20-0401.03
Expiration Date: 07/30/2025
By: Manuel Perez
Miami-Dade Product Control

| | |
|---|---|
| Revision: | C) NO CHANGES THIS SHEET. AK - 03/10/20 |
| Description: | FLANGE & EQUAL-LEG/BOX FRAMES |
| Drawn By: | J ROSOWSKI |
| Title: | SINGLE HUNG WINDOW INSTALLATION - LM |
| Date: | 05/15/15 |
| Series/Model: | SH-5500 |
| Scale: | NTS |
| Sheet: | 3 OF 13 |
| Drawing No. | MD-SH5500-01 |
| Rev: | C |

# INSTALLATION DETAILS FOR INTEGRAL FIN & J-CHANNEL FRAMES

## INSTALLATION OPTION 5

ANCHORED THROUGH INTEGRAL FIN INTO 2X WOOD FRAME OR BUCK- STRIP. SEE NOTE 2, THIS SHEET.

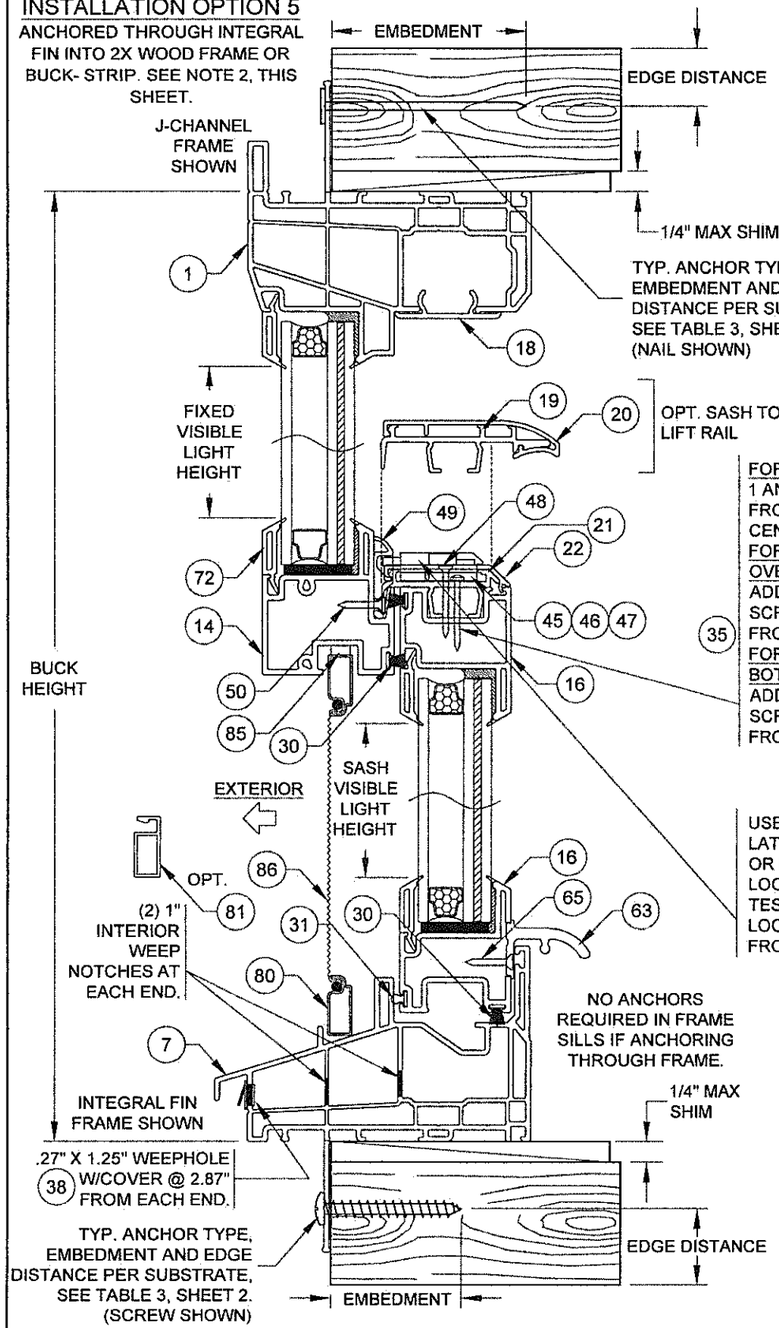


FOR ALL WINDOWS: 1 ANCHOR @ 3.55" FROM END AND AT CENTER.
FOR WINDOWS OVER 36" WIDE: ADD ADDITIONAL SCREWS @16-3/8" FROM END.
FOR WINDOWS WITH BOTTOM LOCKS: ADD ADDITIONAL SCREWS @ 8-3/8" FROM END.

USE EITHER LATCH (SHOWN) OR BOTTOM LOCK (SHEET 3). TESTED UNIT LOCATION: 6-5/8" FROM SASH END.

## INSTALLATION OPTION 5

ANCHORED THROUGH INTEGRAL FIN INTO 2X WOOD FRAME OR BUCK-STRIP. SEE NOTE 2, THIS SHEET.

## VERTICAL SECTION D-D

NOTES:

1) USE ONLY SUBSTRATE-APPROPRIATE ANCHORS LISTED ON TABLES 2 & 3 OF SHEET 2. FOLLOW EMBEDMENT AND EDGE DISTANCE LIMITS. ANY INSTALLATION OPTION SHOWN MAY BE USED ON ANY SIDE OF THE WINDOW.

2) MASONRY ANCHORS MAY BE USED INTO WOOD AS PER TABLE 2, SHEET 2. ALL WOOD BUCKS LESS THAN 1-1/2" THICK ARE TO BE CONSIDERED 1X INSTALLATIONS. 1X WOOD BUCKS ARE OPTIONAL IF UNIT IS INSTALLED DIRECTLY TO SUBSTRATE. WOOD BUCKS DEPICTED AS 2X ARE 1-1/2" THICK OR GREATER. 1X AND 2X BUCKS (WHEN USED) SHALL BE DESIGNED TO PROPERLY TRANSFER LOADS TO THE STRUCTURE. WOOD BUCK DESIGN AND INSTALLATION IS THE RESPONSIBILITY OF THE ENGINEER OR ARCHITECT OF RECORD.

3) VISIBLE LIGHT WIDTH OR HEIGHT (ALSO REFERRED TO AS DAYLIGHT OPENING) IS MEASURED FROM BEADING TO BEADING.

### VISIBLE LIGHT FORMULAS

WIDTH
@SASH: BUCK WIDTH - 6-1/2"
@ FIXED LITE: BUCK WIDTH - 4-3/8"

HEIGHT (EQUAL-LITE)
BUCK HEIGHT/2 - 3-15/16"

## INSTALLATION OPTION 6

ANCHORED THROUGH FRAME INTO 2X WOOD FRAME OR BUCKSTRIP. SEE NOTE 2, THIS SHEET.

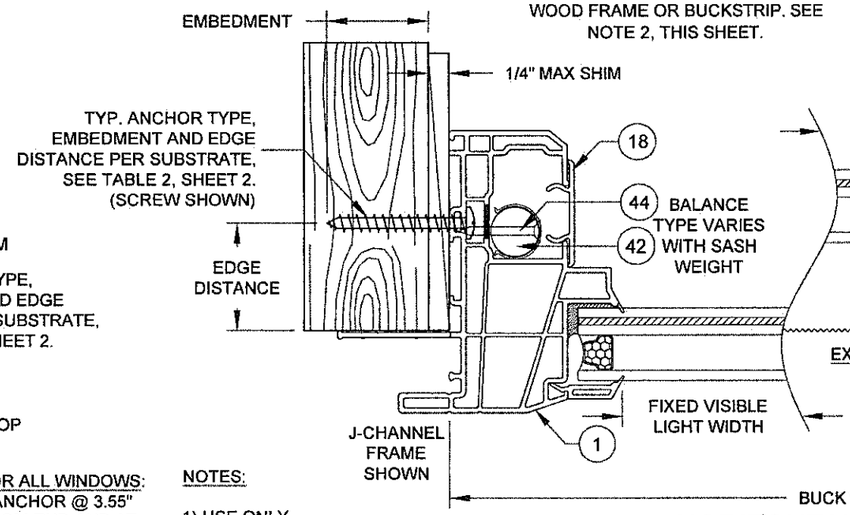


## INSTALLATION OPTION 5

ANCHORED THROUGH INTEGRAL FIN INTO 2X WOOD FRAME OR BUCKSTRIP. SEE NOTE 2, THIS SHEET.

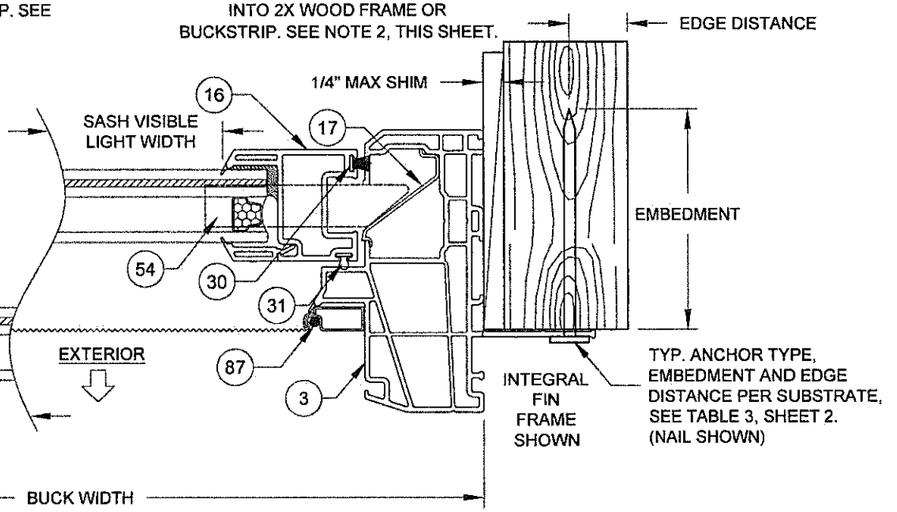


## HORIZONTAL SECTION C-C

FBC COMPLIANT ALUMINUM/STEEL FRAMING OR STEEL STUD. MAY BE VERTICAL OR HORIZONTAL. SEE SUBSTRATE PROPERTIES, TABLES 2 & 3, SHEET 2.

ALSO FOR DADE-APPROVED MULLION

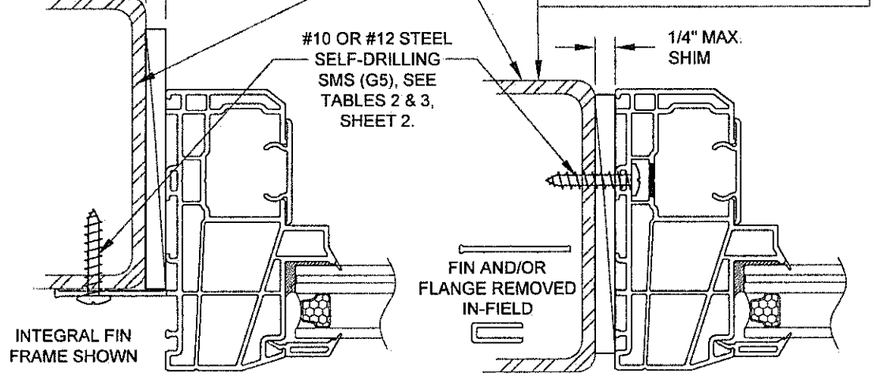


## INSTALLATION OPTION 7

ANCHORED THROUGH INTEGRAL FIN INTO METAL

EXTERIOR

## INSTALLATION OPTION 8

ANCHORED THROUGH FRAME INTO METAL (INTEGRAL FIN/FLANGE REMOVED)

ANTHONY LYNN MILLER LICENSE No. 58705 STATE OF FLORIDA PROFESSIONAL ENGINEER
3/13/20
A. LYNN MILLER, P.E.
P.E.# 58705


1070 TECHNOLOGY DRIVE
N. VENICE, FL 34275
(941)-480-1600

REGISTRATION #29296


**PRODUCT REVISED**
**as complying with the Florida Building Code**
**NOA-No. 20-0401.03**
**Expiration Date: 07/30/2025**
**By:** Manuel Perez
**Miami-Dade Product Control**

| | |
|---|---|
| Revision: | C) REVISED DADE MULLION NOTE. AK - 03/10/20 |
| Description: | J-CHANNEL & INTEGRAL FIN FRAMES |
| Drawn By: | J ROSOWSKI |
| Title: | SINGLE HUNG WINDOW INSTALLATION - LM |
| Date: | 05/15/15 |
| Series/Model: | SH-5500 |
| Scale: | NTS |
| Sheet: | 4 OF 13 |
| Drawing No. | MD-SH5500-01 |
| Rev: | C |

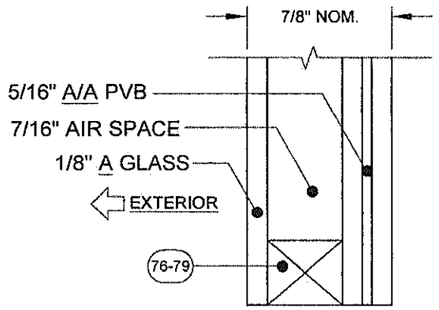


GLASS TYPE 5

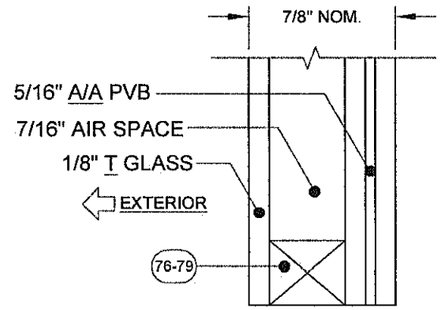


GLASS TYPE 6

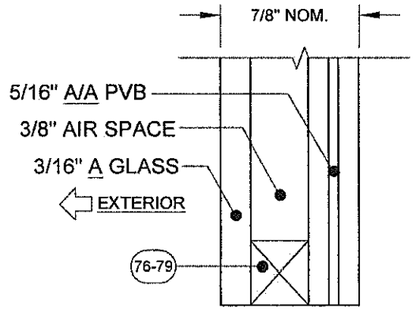


GLASS TYPE 7

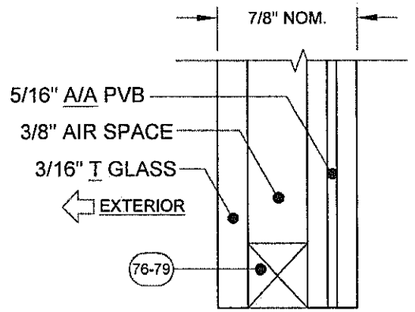


GLASS TYPE 8

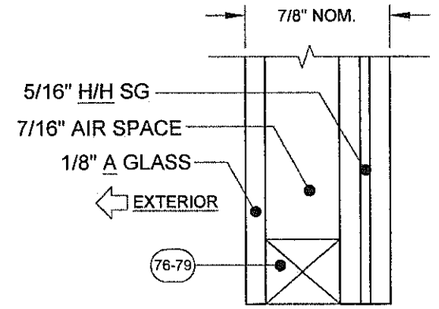


GLASS TYPE 9

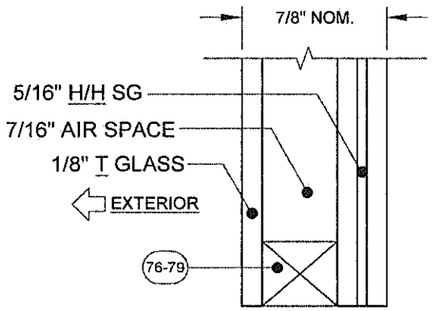


GLASS TYPE 10

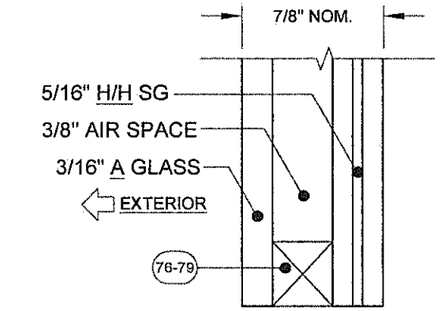


GLASS TYPE 11

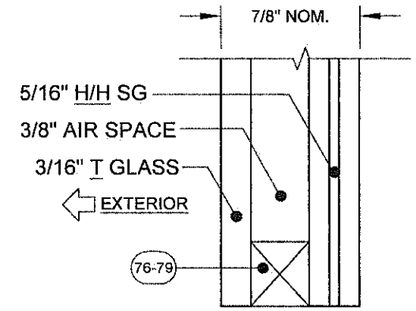


GLASS TYPE 12

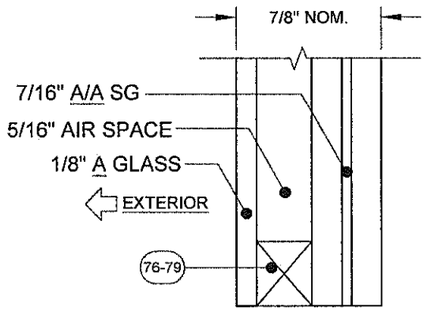


GLASS TYPE 13

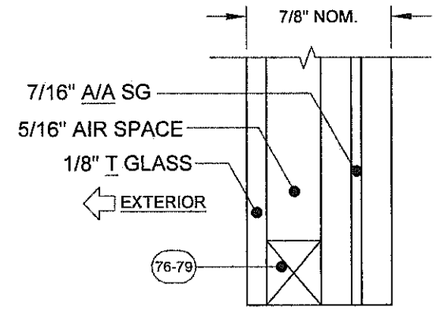


GLASS TYPE 14

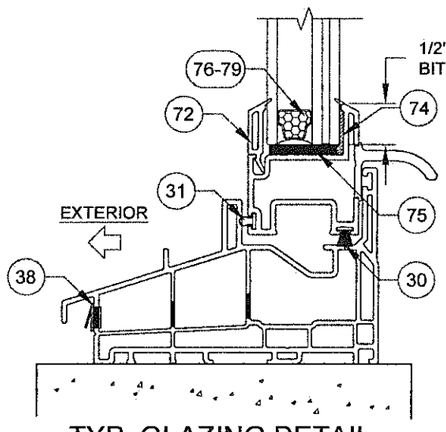


TYP. GLAZING DETAIL

GLASS TYPES 9 THROUGH 16 MAY NOT BE USED WITH J-CHANNEL OR INTEGRAL FIN FRAMES

GLASS TYPES 5, 7, 9, 11, 13 & 15 MAY NOT BE USED IN THE HVHZ ABOVE 30'.

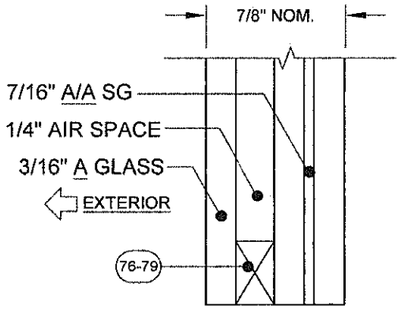


GLASS TYPE 15

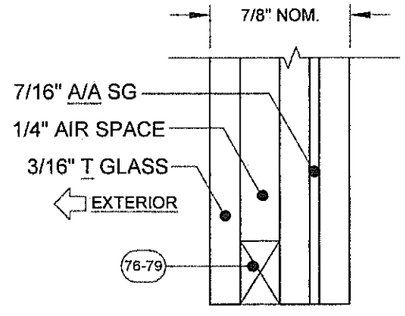


GLASS TYPE 16

GLAZING NOTES:
"A" = ANNEALED
"H" = HEAT STRENGTHENED
"T" = TEMPERED
"PVB" = .090" TROSIFOL® PVB BY KURARAY AMERICA, INC.
"SG" = .090" SENTRYGLAS® BY KURARAY AMERICA, INC.

FOR LAMINATED GLAZING COMPONENTS, SEE TABLE 1, SHEET 2.

ANTHONY LYNN MILLER LICENSE No. 58705 STATE OF FLORIDA PROFESSIONAL ENGINEER
3/13/20
A. LYNN MILLER, P.E.
P.E.# 58705

PGT®
1070 TECHNOLOGY DRIVE
N. VENICE, FL 34275
(941)-480-1600
REGISTRATION #29296

**PRODUCT REVISED**
**as complying with the Florida Building Code**
**NOA–No. 20-0401.03**
**Expiration Date: 07/30/2025**
**By:** Manuel Perez
**Miami–Dade Product Control**

*Revision:*
C) NO CHANGES THIS SHEET.
AK - 03/10/20

*Description:* GLAZING DETAILS
*Drawn By:* J ROSOWSKI
*Title:* SINGLE HUNG WINDOW INSTALLATION - LM
*Date:* 05/15/15
*Series/Model:* SH-5500
*Scale:* NTS
*Sheet:* 5 OF 13
*Drawing No.* MD-SH5500-01
*Rev:* C

TABLE 4:

| Glass Types 5, 6, 7 & 8 | Design Pressure, lbs/ft² |
|---|---|
| | +/- 50.0 |
| Reinf. Level R1 | For all window & sash sizes |

SEE TABLE 9, SHEET 8 FOR ANCHOR GROUP AND QUANTITY.

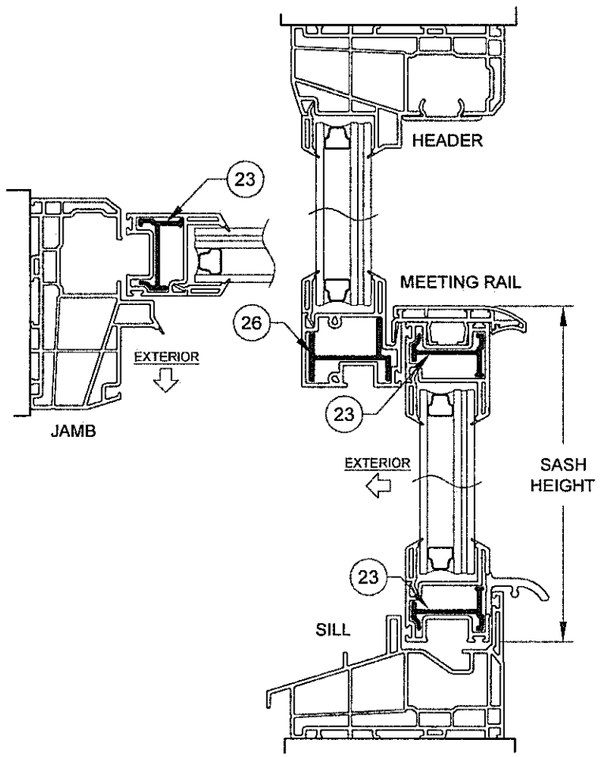


SECTION DETAIL FOR WINDOWS WITH
LEVEL R1 REINFORCEMENT & GLASS TYPES 5, 6, 7 & 8
(REINFORCEMENTS SHOWN IN FIGURES ABOVE APPLY TO ALL FRAME TYPES & CONFIGURATIONS)

TABLE 5:

| Glass Type 5 / Reinf. Level R2 | | Bottom Sash Description for given Range @ Window Height Shown | Sash Height Range (in) | Design Pressure, lbs/ft² | | | |
|---|---|---|---|---|---|---|---|
| | | | | Window Buck Width (in) | | | |
| | | | | up to 48 | | 52.125 | |
| Window Buck Height (in) | 23.5 | Equal-lite | 11.394 | +65.0 | -70.0 | +65.0 | -70.0 |
| | 28 | Standard Cottage | 14.517 - 15.870 | +65.0 | -70.0 | +65.0 | -70.0 |
| | | Equal-lite | 11.583 - 14.516 | +65.0 | -70.0 | +65.0 | -70.0 |
| | | Standard Proview | 11.377 - 11.582 | +65.0 | -70.0 | +65.0 | -70.0 |
| | 37.375 | Tallest | 23.517 - 25.286 | +65.0 | -70.0 | +65.0 | -70.0 |
| | | Standard Cottage | 20.958 - 23.516 | +65.0 | -70.0 | +65.0 | -70.0 |
| | | Equal-lite | 17.517 - 20.957 | +65.0 | -70.0 | +65.0 | -70.0 |
| | | Standard Proview | 14.517 - 17.516 | +65.0 | -70.0 | +65.0 | -70.0 |
| | | Shortest | 11.377 - 14.516 | +65.0 | -70.0 | +65.0 | -70.0 |
| | 44 | Tallest | 27.583 - 31.911 | +65.0 | -70.0 | +65.0 | -70.0 |
| | | Custom Size | 26.517 - 27.582 | +65.0 | -70.0 | +65.0 | -70.0 |
| | | Standard Cottage | 23.517 - 26.516 | +65.0 | -70.0 | +65.0 | -70.0 |
| | | Equal-lite | 20.517 - 23.516 | +65.0 | -70.0 | +65.0 | -70.0 |
| | | Standard Proview | 17.517 - 20.516 | +65.0 | -70.0 | +65.0 | -70.0 |
| | | Custom Size | 14.517 - 17.516 | +65.0 | -70.0 | +65.0 | -70.0 |
| | | Shortest | 11.377 - 14.516 | +65.0 | -70.0 | +65.0 | -70.0 |
| | 48 | Tallest | 31.583 - 35.911 | +65.0 | -70.0 | +65.0 | -70.0 |
| | | Standard Cottage | 26.517 - 31.582 | +65.0 | -70.0 | +65.0 | -70.0 |
| | | Equal-lite | 20.517 - 26.516 | +65.0 | -70.0 | +65.0 | -70.0 |
| | | Standard Proview | 17.517 - 20.516 | +65.0 | -70.0 | +65.0 | -70.0 |
| | | Custom Size | 14.517 - 17.516 | +65.0 | -70.0 | +65.0 | -70.0 |
| | | Custom Size | 12.517 - 14.516 | +65.0 | -70.0 | +65.0 | -70.0 |
| | | Shortest | 11.377 - 12.516 | +65.0 | -70.0 | +65.0 | -70.0 |
| | 49.625 | Tallest | 33.208 - 37.536 | +65.0 | -70.0 | +65.0 | -70.0 |
| | | Standard Cottage | 26.517 - 33.207 | +65.0 | -70.0 | +65.0 | -70.0 |
| | | Equal-lite | 23.517 - 26.516 | +65.0 | -70.0 | +65.0 | -70.0 |
| | | Custom Size | 20.517 - 23.516 | +65.0 | -70.0 | +65.0 | -70.0 |
| | | Standard Proview | 17.517 - 20.516 | +65.0 | -70.0 | +65.0 | -70.0 |
| | | Custom Size | 14.517 - 17.516 | +65.0 | -70.0 | +65.0 | -70.0 |
| | | Custom Size | 12.517 - 14.516 | +65.0 | -70.0 | +65.0 | -70.0 |
| | | Shortest | 11.377 - 12.516 | +65.0 | -70.0 | +65.0 | -70.0 |
| | 62 | Tallest | 36.517 - 41.644 | +65.0 | -70.0 | +65.0 | -70.0 |
| | | Standard Cottage | 31.517 - 36.516 | +65.0 | -70.0 | +65.0 | -70.0 |
| | | Equal-lite | 26.517 - 31.516 | +65.0 | -70.0 | +65.0 | -70.0 |
| | | Standard Proview | 23.517 - 26.516 | +65.0 | -70.0 | +65.0 | -70.0 |
| | | Custom Size | 20.517 - 23.516 | +65.0 | -70.0 | +65.0 | -70.0 |
| | | Custom Size | 17.517 - 20.516 | +65.0 | -70.0 | +65.0 | -70.0 |
| | | Custom Size | 14.517 - 17.516 | +65.0 | -70.0 | +65.0 | -68.1 |
| | | Custom Size | 13.017 - 14.516 | +65.0 | -70.0 | +65.0 | -67.3 |
| | | Shortest | 11.864 - 13.016 | +65.0 | -70.0 | +65.0 | -66.5 |
| | 75 | Tallest | 39.517 - 41.644 | +65.0 | -70.0 | +65.0 | -70.0 |
| | | Custom Size | 38.517 - 39.516 | +65.0 | -70.0 | +65.0 | -70.0 |
| | | Equal-lite | 35.517 - 38.516 | +65.0 | -70.0 | +65.0 | -70.0 |
| | | Custom Size | 32.517 - 35.516 | +65.0 | -70.0 | +65.0 | -70.0 |
| | | Standard Proview | 29.517 - 32.516 | +65.0 | -70.0 | +65.0 | -70.0 |
| | | Custom Size | 26.517 - 29.516 | +65.0 | -70.0 | +65.0 | -67.3 |
| | | Shortest | 24.864 - 26.516 | +65.0 | -70.0 | +65.0 | -66.5 |
| | 84 | Equal-lite | 38.517 - 41.644 | +65.0 | -70.0 | +65.0 | -70.0 |
| | | Custom Size | 35.517 - 38.516 | +65.0 | -70.0 | +65.0 | -67.3 |
| | | Standard Proview | 33.864 - 35.516 | +65.0 | -70.0 | +65.0 | -66.5 |
| | 91.78 | Tallest | ** - 41.644 | +65.0 | -70.0 | +65.0 | -66.5 |

SEE TABLE 10, SHEET 9 FOR ANCHOR GROUP AND QUANTITY.
** MIN. SASH HEIGHT = WINDOW BUCK HEIGHT - 50.136
(APPLIES TO ANY HEIGHT 91.78" OR LESS)

TABLE 6:

| Glass Types 6, 7 & 8 | Design Pressure, lbs/ft² |
|---|---|
| | +65.0 / -70.0 |
| Reinf. Level R2 | For all window and sash sizes |

SEE TABLE 10, SHEET 9 FOR ANCHOR GROUP AND QUANTITY.

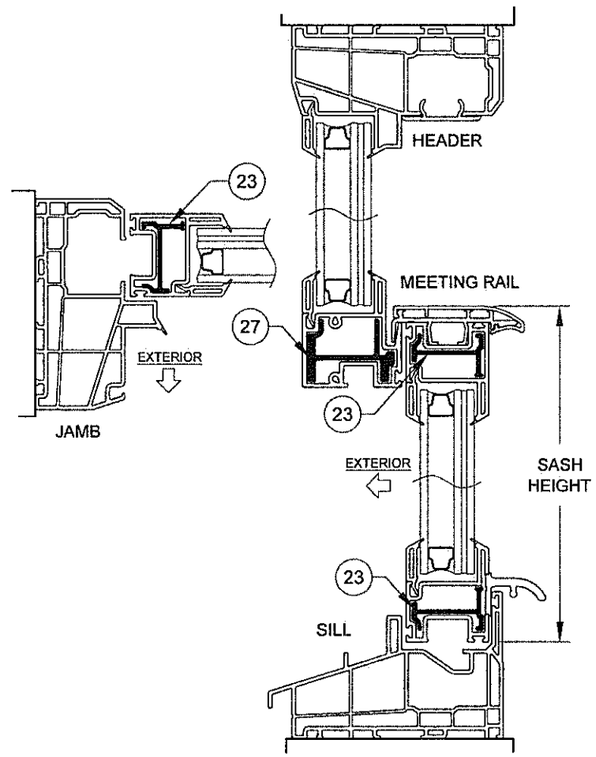


SECTION DETAIL FOR WINDOWS WITH
LEVEL R2 REINFORCEMENT & GLASS TYPES 5, 6, 7 & 8
(REINFORCEMENTS SHOWN IN FIGURES ABOVE APPLY TO ALL FRAME TYPES & CONFIGURATIONS)

NOTES:

1) USE THESE TABLES FOR ALL WINDOWS INSTALLED THROUGH THE FRAME OR INTEGRAL FIN.

2) FRAME DIMENSIONS ARE BUCK. SASH HEIGHT IS AS PER THE FIGURE.

3) FOR SIZES NOT SHOWN, ROUND UP TO THE NEXT AVAILABLE WIDTH OR HEIGHT DIMENSION SHOWN ON THE TABLE.

ANTHONY LYNN MILLER LICENSE No. 58705 STATE OF FLORIDA PROFESSIONAL ENGINEER
3/13/20
A. LYNN MILLER, P.E.
P.E.# 58705


1070 TECHNOLOGY DRIVE
N. VENICE, FL 34275
(941)-480-1600
REGISTRATION #29296


**PRODUCT REVISED**
**as complying with the Florida Building Code**
**NOA-No. 20-0401.03**
**Expiration Date: 07/30/2025**
**By:** Manuel Perez
**Miami-Dade Product Control**

| | |
|---|---|
| Revision: | C) SASH HEIGHT CORRECTION. AK - 03/10/20 |
| Description: | DESIGN PRESSURE TABLES |
| Drawn By: | J ROSOWSKI |
| Title: | SINGLE HUNG WINDOW INSTALLATION - LM |
| Date: | 05/15/15 |
| Series/Model: | SH-5500 |
| Scale: | NTS |
| Sheet: | 6 OF 13 |
| Drawing No. | MD-SH5500-01 |
| Rev: | C |

TABLE 7:

| Glass Type 9-12, 15 & 16 Reinf. Level 3 | Bottom Sash Description for given Range @ Window Height Shown | Sash Height Range (in) | Design Pressure, lbs/ft² — Window Buck Width (in) | | | | | | | |
|---|---|---|---|---|---|---|---|---|---|---|
| | | | up to 40 | | 48 | | 52.125 | | 54 | |
| Window Buck Height (in) 23.5 | Equal-lite | 11.394 | +70.0 | -110.0 | +70.0 | -110.0 | +70.0 | -110.0 | +70.0 | -110.0 |
| 28 | Standard Cottage | 14.517 - 15.870 | +70.0 | -110.0 | +70.0 | -110.0 | +70.0 | -110.0 | +70.0 | -110.0 |
| | Equal-lite | 11.583 - 14.516 | +70.0 | -110.0 | +70.0 | -110.0 | +70.0 | -110.0 | +70.0 | -110.0 |
| | Standard Proview | 11.377 - 11.582 | +70.0 | -110.0 | +70.0 | -110.0 | +70.0 | -110.0 | +70.0 | -110.0 |
| 37.375 | Tallest | 23.517 - 25.286 | +70.0 | -110.0 | +70.0 | -110.0 | +70.0 | -110.0 | +70.0 | -110.0 |
| | Standard Cottage | 20.958 - 23.516 | +70.0 | -110.0 | +70.0 | -110.0 | +70.0 | -110.0 | +70.0 | -110.0 |
| | Equal-lite | 17.517 - 20.957 | +70.0 | -110.0 | +70.0 | -110.0 | +70.0 | -110.0 | +70.0 | -109.0 |
| | Standard Proview | 14.517 - 17.516 | +70.0 | -110.0 | +70.0 | -110.0 | +70.0 | -110.0 | +70.0 | -110.0 |
| | Shortest | 11.377 - 14.516 | +70.0 | -110.0 | +70.0 | -110.0 | +70.0 | -107.0 | +70.0 | -103.0 |
| 44 | Tallest | 27.583 - 31.911 | +70.0 | -110.0 | +70.0 | -99.0 | +70.0 | -93.0 | +70.0 | -90.0 |
| | Custom Size | 26.517 - 27.582 | +70.0 | -110.0 | +70.0 | -110.0 | +70.0 | -110.0 | +70.0 | -110.0 |
| | Standard Cottage | 23.517 - 26.516 | +70.0 | -110.0 | +70.0 | -110.0 | +70.0 | -110.0 | +70.0 | -110.0 |
| | Equal-lite | 20.517 - 23.516 | +70.0 | -110.0 | +70.0 | -110.0 | +70.0 | -110.0 | +70.0 | -110.0 |
| | Standard Proview | 17.517 - 20.516 | +70.0 | -110.0 | +70.0 | -110.0 | +70.0 | -110.0 | +70.0 | -110.0 |
| | Custom Size | 14.517 - 17.516 | +70.0 | -110.0 | +70.0 | -110.0 | +70.0 | -110.0 | +70.0 | -110.0 |
| | Shortest | 11.377 - 14.516 | +70.0 | -110.0 | +70.0 | -110.0 | +70.0 | -107.0 | +70.0 | -103.0 |
| 48 | Tallest | 31.583 - 35.911 | +70.0 | -110.0 | +70.0 | -99.0 | +70.0 | -93.0 | +70.0 | -90.0 |
| | Standard Cottage | 26.517 - 31.582 | +70.0 | -110.0 | +70.0 | -110.0 | +70.0 | -110.0 | +70.0 | -110.0 |
| | Equal-lite | 20.517 - 26.516 | +70.0 | -110.0 | +70.0 | -110.0 | +70.0 | -110.0 | +70.0 | -110.0 |
| | Standard Proview | 17.517 - 20.516 | +70.0 | -110.0 | +70.0 | -110.0 | +70.0 | -110.0 | +70.0 | -110.0 |
| | Custom Size | 14.517 - 17.516 | +70.0 | -110.0 | +70.0 | -110.0 | +70.0 | -110.0 | +70.0 | -110.0 |
| | Custom Size | 12.517 - 14.516 | +70.0 | -110.0 | +70.0 | -110.0 | +70.0 | -110.0 | +70.0 | -110.0 |
| | Shortest | 11.377 - 12.516 | +70.0 | -110.0 | +70.0 | -110.0 | +70.0 | -110.0 | +70.0 | -110.0 |
| 49.625 | Tallest | 33.208 - 37.536 | +70.0 | -110.0 | +70.0 | -99.0 | +70.0 | -93.0 | +70.0 | -90.0 |
| | Standard Cottage | 26.517 - 33.207 | +70.0 | -110.0 | +70.0 | -110.0 | +70.0 | -110.0 | +70.0 | -110.0 |
| | Equal-lite | 23.517 - 26.516 | +70.0 | -110.0 | +70.0 | -110.0 | +70.0 | -110.0 | +70.0 | -110.0 |
| | Custom Size | 20.517 - 23.516 | +70.0 | -110.0 | +70.0 | -110.0 | +70.0 | -110.0 | +70.0 | -110.0 |
| | Standard Proview | 17.517 - 20.516 | +70.0 | -110.0 | +70.0 | -110.0 | +70.0 | -110.0 | +70.0 | -110.0 |
| | Custom Size | 14.517 - 17.516 | +70.0 | -110.0 | +70.0 | -110.0 | +70.0 | -110.0 | +70.0 | -110.0 |
| | Custom Size | 12.517 - 14.516 | +70.0 | -110.0 | +70.0 | -110.0 | +70.0 | -110.0 | +70.0 | -110.0 |
| | Shortest | 11.377 - 12.516 | +70.0 | -110.0 | +70.0 | -110.0 | +70.0 | -110.0 | +70.0 | -110.0 |
| 62 | Tallest | 36.517 - 41.644 | +70.0 | -110.0 | +70.0 | -110.0 | +70.0 | -110.0 | +70.0 | -110.0 |
| | Standard Cottage | 31.517 - 36.516 | +70.0 | -110.0 | +70.0 | -110.0 | +70.0 | -110.0 | +70.0 | -110.0 |
| | Equal-lite | 26.517 - 31.516 | +70.0 | -110.0 | +70.0 | -110.0 | +70.0 | -110.0 | +70.0 | -110.0 |
| | Standard Proview | 23.517 - 26.516 | +70.0 | -110.0 | +70.0 | -110.0 | +70.0 | -110.0 | +70.0 | -110.0 |
| | Custom Size | 20.517 - 23.516 | +70.0 | -110.0 | +70.0 | -110.0 | +70.0 | -110.0 | +70.0 | -110.0 |
| | Custom Size | 17.517 - 20.516 | +70.0 | -110.0 | +70.0 | -110.0 | +70.0 | -110.0 | +70.0 | -110.0 |
| | Custom Size | 14.517 - 17.516 | +70.0 | -110.0 | +70.0 | -110.0 | +70.0 | -110.0 | +70.0 | -110.0 |
| | Custom Size | 13.017 - 14.516 | +70.0 | -110.0 | +70.0 | -110.0 | +70.0 | -110.0 | +70.0 | -110.0 |
| | Shortest | 11.864 - 13.016 | +70.0 | -110.0 | +70.0 | -110.0 | +70.0 | -110.0 | +70.0 | -110.0 |
| 75 | Tallest | 39.517 - 41.644 | +70.0 | -110.0 | +70.0 | -110.0 | +70.0 | -110.0 | +70.0 | -110.0 |
| | Custom Size | 38.517 - 39.516 | +70.0 | -110.0 | +70.0 | -110.0 | +70.0 | -110.0 | +70.0 | -110.0 |
| | Equal-lite | 35.517 - 38.516 | +70.0 | -110.0 | +70.0 | -110.0 | +70.0 | -110.0 | +70.0 | -110.0 |
| | Custom Size | 32.517 - 35.516 | +70.0 | -110.0 | +70.0 | -110.0 | +70.0 | -110.0 | +70.0 | -110.0 |
| | Standard Proview | 29.517 - 32.516 | +70.0 | -110.0 | +70.0 | -110.0 | +70.0 | -110.0 | +70.0 | -110.0 |
| | Custom Size | 26.517 - 29.516 | +70.0 | -110.0 | +70.0 | -110.0 | +70.0 | -110.0 | +70.0 | -110.0 |
| | Shortest | 24.864 - 26.516 | +70.0 | -110.0 | +70.0 | -110.0 | +70.0 | -110.0 | +70.0 | -110.0 |
| 84 | Equal-lite | 38.517 - 41.644 | +70.0 | -110.0 | +70.0 | -110.0 | +70.0 | -110.0 | +70.0 | -110.0 |
| | Custom Size | 35.517 - 38.516 | +70.0 | -110.0 | +70.0 | -110.0 | +70.0 | -110.0 | +70.0 | -110.0 |
| | Standard Proview | 33.864 - 35.516 | +70.0 | -110.0 | +70.0 | -110.0 | +70.0 | -110.0 | +70.0 | -110.0 |
| 91.78 | Tallest | ** - 41.644 | +70.0 | -110.0 | +70.0 | -110.0 | +70.0 | -110.0 | +70.0 | -110.0 |

SEE TABLE 11, SHEET 10 FOR ANCHOR GROUP AND QUANTITY.
** MIN. SASH HEIGHT = WINDOW BUCK HEIGHT - 50.136
(APPLIES TO ANY HEIGHT 91.78" OR LESS)

TABLE 8:

| Glass Type 13 & 14 Reinf. Level 3 | Bottom Sash Description for given Range @ Window Height Shown | Sash Height Range (in) | Design Pressure lbs/ft² — Window Buck Width (in) | | | | | | | | | | | | | | | |
|---|---|---|---|---|---|---|---|---|---|---|---|---|---|---|---|---|---|---|
| | | | 18 | | 24 | | 32 | | 36 | | 40 | | 48 | | 52.125 | | 54 | |
| Window Buck Height (in) 23.5 | Equal-lite | 11.394 | +70.0 | -110.0 | +70.0 | -110.0 | +70.0 | -110.0 | +70.0 | -110.0 | +70.0 | -110.0 | +70.0 | -110.0 | +70.0 | -110.0 | +70.0 | -110.0 |
| 28 | Standard Cottage | 14.517 - 15.870 | +70.0 | -110.0 | +70.0 | -110.0 | +70.0 | -110.0 | +70.0 | -110.0 | +70.0 | -110.0 | +70.0 | -110.0 | +70.0 | -110.0 | +70.0 | -110.0 |
| | Equal-lite | 11.583 - 14.516 | +70.0 | -110.0 | +70.0 | -110.0 | +70.0 | -110.0 | +70.0 | -110.0 | +70.0 | -110.0 | +70.0 | -110.0 | +70.0 | -110.0 | +70.0 | -110.0 |
| | Standard Proview | 11.377 - 11.582 | +70.0 | -110.0 | +70.0 | -110.0 | +70.0 | -110.0 | +70.0 | -110.0 | +70.0 | -110.0 | +70.0 | -110.0 | +70.0 | -110.0 | +70.0 | -110.0 |
| 37.375 | Tallest | 23.517 - 25.286 | +70.0 | -110.0 | +70.0 | -110.0 | +70.0 | -110.0 | +70.0 | -110.0 | +70.0 | -110.0 | +70.0 | -110.0 | +70.0 | -110.0 | +70.0 | -110.0 |
| | Standard Cottage | 20.958 - 23.516 | +70.0 | -110.0 | +70.0 | -110.0 | +70.0 | -110.0 | +70.0 | -110.0 | +70.0 | -110.0 | +70.0 | -110.0 | +70.0 | -110.0 | +70.0 | -110.0 |
| | Equal-lite | 17.517 - 20.957 | +70.0 | -110.0 | +70.0 | -110.0 | +70.0 | -110.0 | +70.0 | -110.0 | +70.0 | -110.0 | +70.0 | -110.0 | +70.0 | -110.0 | +70.0 | -109.0 |
| | Standard Proview | 14.517 - 17.516 | +70.0 | -110.0 | +70.0 | -110.0 | +70.0 | -110.0 | +70.0 | -110.0 | +70.0 | -110.0 | +70.0 | -110.0 | +70.0 | -110.0 | +70.0 | -110.0 |
| | Shortest | 11.377 - 14.516 | +70.0 | -110.0 | +70.0 | -110.0 | +70.0 | -110.0 | +70.0 | -110.0 | +70.0 | -110.0 | +70.0 | -110.0 | +70.0 | -107.0 | +70.0 | -103.0 |
| 44 | Tallest | 27.583 - 31.911 | +70.0 | -110.0 | +70.0 | -110.0 | +70.0 | -110.0 | +70.0 | -110.0 | +70.0 | -110.0 | +70.0 | -99.0 | +70.0 | -93.0 | +70.0 | -90.0 |
| | Custom Size | 26.517 - 27.582 | +70.0 | -110.0 | +70.0 | -110.0 | +70.0 | -110.0 | +70.0 | -110.0 | +70.0 | -110.0 | +70.0 | -110.0 | +70.0 | -110.0 | +70.0 | -110.0 |
| | Standard Cottage | 23.517 - 26.516 | +70.0 | -110.0 | +70.0 | -110.0 | +70.0 | -110.0 | +70.0 | -110.0 | +70.0 | -110.0 | +70.0 | -110.0 | +70.0 | -110.0 | +70.0 | -110.0 |
| | Equal-lite | 20.517 - 23.516 | +70.0 | -110.0 | +70.0 | -110.0 | +70.0 | -110.0 | +70.0 | -110.0 | +70.0 | -110.0 | +70.0 | -110.0 | +70.0 | -110.0 | +70.0 | -110.0 |
| | Standard Proview | 17.517 - 20.516 | +70.0 | -110.0 | +70.0 | -110.0 | +70.0 | -110.0 | +70.0 | -110.0 | +70.0 | -110.0 | +70.0 | -110.0 | +70.0 | -110.0 | +70.0 | -110.0 |
| | Custom Size | 14.517 - 17.516 | +70.0 | -110.0 | +70.0 | -110.0 | +70.0 | -110.0 | +70.0 | -110.0 | +70.0 | -110.0 | +70.0 | -110.0 | +70.0 | -110.0 | +70.0 | -110.0 |
| | Custom Size | 12.517 - 14.516 | +70.0 | -110.0 | +70.0 | -110.0 | +70.0 | -110.0 | +70.0 | -110.0 | +70.0 | -110.0 | +70.0 | -110.0 | +70.0 | -110.0 | +70.0 | -110.0 |
| | Shortest | 11.377 - 12.516 | +70.0 | -110.0 | +70.0 | -110.0 | +70.0 | -110.0 | +70.0 | -110.0 | +70.0 | -110.0 | +70.0 | -110.0 | +70.0 | -110.0 | +70.0 | -110.0 |
| 48 | Tallest | 31.583 - 35.911 | +70.0 | -110.0 | +70.0 | -110.0 | +70.0 | -110.0 | +70.0 | -110.0 | +70.0 | -110.0 | +70.0 | -99.0 | +70.0 | -93.0 | +70.0 | -90.0 |
| | Standard Cottage | 26.517 - 31.582 | +70.0 | -110.0 | +70.0 | -110.0 | +70.0 | -110.0 | +70.0 | -110.0 | +70.0 | -110.0 | +70.0 | -110.0 | +70.0 | -110.0 | +70.0 | -110.0 |
| | Equal-lite | 20.517 - 26.516 | +70.0 | -110.0 | +70.0 | -110.0 | +70.0 | -110.0 | +70.0 | -110.0 | +70.0 | -110.0 | +70.0 | -110.0 | +70.0 | -110.0 | +70.0 | -110.0 |
| | Standard Proview | 17.517 - 20.516 | +70.0 | -110.0 | +70.0 | -110.0 | +70.0 | -110.0 | +70.0 | -110.0 | +70.0 | -110.0 | +70.0 | -110.0 | +70.0 | -110.0 | +70.0 | -110.0 |
| | Custom Size | 14.517 - 17.516 | +70.0 | -110.0 | +70.0 | -110.0 | +70.0 | -110.0 | +70.0 | -110.0 | +70.0 | -110.0 | +70.0 | -110.0 | +70.0 | -110.0 | +70.0 | -110.0 |
| | Custom Size | 12.517 - 14.516 | +70.0 | -110.0 | +70.0 | -110.0 | +70.0 | -110.0 | +70.0 | -110.0 | +70.0 | -110.0 | +70.0 | -110.0 | +70.0 | -110.0 | +70.0 | -110.0 |
| | Shortest | 11.377 - 12.516 | +70.0 | -110.0 | +70.0 | -110.0 | +70.0 | -110.0 | +70.0 | -110.0 | +70.0 | -110.0 | +70.0 | -110.0 | +70.0 | -110.0 | +70.0 | -110.0 |
| 49.625 | Tallest | 33.208 - 37.536 | +70.0 | -110.0 | +70.0 | -110.0 | +70.0 | -110.0 | +70.0 | -110.0 | +70.0 | -110.0 | +70.0 | -99.0 | +70.0 | -93.0 | +70.0 | -90.0 |
| | Standard Cottage | 26.517 - 33.207 | +70.0 | -110.0 | +70.0 | -110.0 | +70.0 | -110.0 | +70.0 | -110.0 | +70.0 | -110.0 | +70.0 | -110.0 | +70.0 | -110.0 | +70.0 | -110.0 |
| | Equal-lite | 23.517 - 26.516 | +70.0 | -110.0 | +70.0 | -110.0 | +70.0 | -110.0 | +70.0 | -110.0 | +70.0 | -110.0 | +70.0 | -110.0 | +70.0 | -110.0 | +70.0 | -110.0 |
| | Custom Size | 20.517 - 23.516 | +70.0 | -110.0 | +70.0 | -110.0 | +70.0 | -110.0 | +70.0 | -110.0 | +70.0 | -110.0 | +70.0 | -110.0 | +70.0 | -110.0 | +70.0 | -110.0 |
| | Standard Proview | 17.517 - 20.516 | +70.0 | -110.0 | +70.0 | -110.0 | +70.0 | -110.0 | +70.0 | -110.0 | +70.0 | -110.0 | +70.0 | -110.0 | +70.0 | -110.0 | +70.0 | -110.0 |
| | Custom Size | 14.517 - 17.516 | +70.0 | -110.0 | +70.0 | -110.0 | +70.0 | -110.0 | +70.0 | -110.0 | +70.0 | -110.0 | +70.0 | -110.0 | +70.0 | -110.0 | +70.0 | -110.0 |
| | Custom Size | 12.517 - 14.516 | +70.0 | -110.0 | +70.0 | -110.0 | +70.0 | -110.0 | +70.0 | -110.0 | +70.0 | -110.0 | +70.0 | -110.0 | +70.0 | -110.0 | +70.0 | -110.0 |
| | Shortest | 11.377 - 12.516 | +70.0 | -110.0 | +70.0 | -110.0 | +70.0 | -110.0 | +70.0 | -110.0 | +70.0 | -110.0 | +70.0 | -110.0 | +70.0 | -110.0 | +70.0 | -110.0 |
| 62 | Tallest | 36.517 - 41.644 | +70.0 | -110.0 | +70.0 | -110.0 | +70.0 | -110.0 | +70.0 | -110.0 | +70.0 | -110.0 | +70.0 | -110.0 | +70.0 | -108.5 | +70.0 | -103.0 |
| | Standard Cottage | 31.517 - 36.516 | +70.0 | -110.0 | +70.0 | -110.0 | +70.0 | -110.0 | +70.0 | -110.0 | +70.0 | -110.0 | +70.0 | -110.0 | +70.0 | -107.9 | +70.0 | -102.4 |
| | Equal-lite | 26.517 - 31.516 | +70.0 | -110.0 | +70.0 | -110.0 | +70.0 | -110.0 | +70.0 | -110.0 | +70.0 | -110.0 | +70.0 | -110.0 | +70.0 | -110.0 | +70.0 | -105.2 |
| | Standard Proview | 23.517 - 26.516 | +70.0 | -110.0 | +70.0 | -110.0 | +70.0 | -110.0 | +70.0 | -110.0 | +70.0 | -110.0 | +70.0 | -110.0 | +70.0 | -110.0 | +70.0 | -107.0 |
| | Custom Size | 20.517 - 23.516 | +70.0 | -110.0 | +70.0 | -110.0 | +70.0 | -110.0 | +70.0 | -110.0 | +70.0 | -110.0 | +70.0 | -110.0 | +70.0 | -110.0 | +70.0 | -109.6 |
| | Custom Size | 17.517 - 20.516 | +70.0 | -110.0 | +70.0 | -110.0 | +70.0 | -110.0 | +70.0 | -110.0 | +70.0 | -110.0 | +70.0 | -110.0 | +70.0 | -110.0 | +70.0 | -110.0 |
| | Custom Size | 14.517 - 17.516 | +70.0 | -110.0 | +70.0 | -110.0 | +70.0 | -110.0 | +70.0 | -106.0 | +70.0 | -102.6 | +70.0 | -100.5 | +70.0 | -100.5 | +70.0 | -100.5 |
| | Custom Size | 13.017 - 14.516 | +70.0 | -110.0 | +70.0 | -110.0 | +70.0 | -106.2 | +70.0 | -100.7 | +70.0 | -97.1 | +70.0 | -94.4 | +70.0 | -94.4 | +70.0 | -94.4 |
| | Shortest | 11.864 - 13.016 | +70.0 | -110.0 | +70.0 | -110.0 | +70.0 | -102.6 | +70.0 | -97.0 | +70.0 | -93.3 | +70.0 | -90.1 | +70.0 | -90.0 | +70.0 | -90.0 |
| 75 | Tallest | 39.517 - 41.644 | +70.0 | -110.0 | +70.0 | -110.0 | +70.0 | -110.0 | +70.0 | -110.0 | +70.0 | -110.0 | +70.0 | -110.0 | +70.0 | -101.5 | +70.0 | -96.0 |
| | Custom Size | 38.517 - 39.516 | +70.0 | -110.0 | +70.0 | -110.0 | +70.0 | -110.0 | +70.0 | -110.0 | +70.0 | -110.0 | +70.0 | -110.0 | +70.0 | -101.7 | +70.0 | -96.3 |
| | Equal-lite | 35.517 - 38.516 | +70.0 | -110.0 | +70.0 | -110.0 | +70.0 | -110.0 | +70.0 | -110.0 | +70.0 | -110.0 | +70.0 | -110.0 | +70.0 | -100.4 | +70.0 | -95.0 |
| | Custom Size | 32.517 - 35.516 | +70.0 | -110.0 | +70.0 | -110.0 | +70.0 | -110.0 | +70.0 | -110.0 | +70.0 | -110.0 | +70.0 | -110.0 | +70.0 | -100.7 | +70.0 | -95.2 |
| | Standard Proview | 29.517 - 32.516 | +70.0 | -110.0 | +70.0 | -110.0 | +70.0 | -110.0 | +70.0 | -110.0 | +70.0 | -110.0 | +70.0 | -109.8 | +70.0 | -101.6 | +70.0 | -96.1 |
| | Custom Size | 26.517 - 29.516 | +70.0 | -110.0 | +70.0 | -110.0 | +70.0 | -107.9 | +70.0 | -102.4 | +70.0 | -98.9 | +70.0 | -96.4 | +70.0 | -96.4 | +70.0 | -96.4 |
| | Shortest | 24.864 - 26.516 | +70.0 | -110.0 | +70.0 | -110.0 | +70.0 | -104.6 | +70.0 | -99.1 | +70.0 | -95.4 | +70.0 | -92.4 | +70.0 | -92.4 | +70.0 | -92.4 |
| 84 | Equal-lite | 38.517 - 41.644 | +70.0 | -110.0 | +70.0 | -110.0 | +70.0 | -110.0 | +70.0 | -110.0 | +70.0 | -110.0 | +70.0 | -109.8 | +70.0 | -96.7 | +70.0 | -91.1 |
| | Custom Size | 35.517 - 38.516 | +70.0 | -110.0 | +70.0 | -110.0 | +70.0 | -107.9 | +70.0 | -102.4 | +70.0 | -98.9 | +70.0 | -96.4 | +70.0 | -96.4 | +70.0 | -91.6 |
| | Standard Proview | 33.864 - 35.516 | +70.0 | -110.0 | +70.0 | -110.0 | +70.0 | -102.6 | +70.0 | -97.0 | +70.0 | -93.3 | +70.0 | -90.1 | +70.0 | -90.0 | +70.0 | -90.0 |
| 91.78 | Tallest | ** - 41.644 | +70.0 | -110.0 | +70.0 | -110.0 | +70.0 | -102.6 | +70.0 | -97.0 | +70.0 | -93.3 | +70.0 | -90.1 | +70.0 | -90.0 | +70.0 | -90.0 |

SEE TABLE 11, SHEET 10 FOR ANCHOR GROUP AND QUANTITY.
** MIN. SASH HEIGHT = WINDOW BUCK HEIGHT - 50.136
(APPLIES TO ANY HEIGHT 91.78" OR LESS)

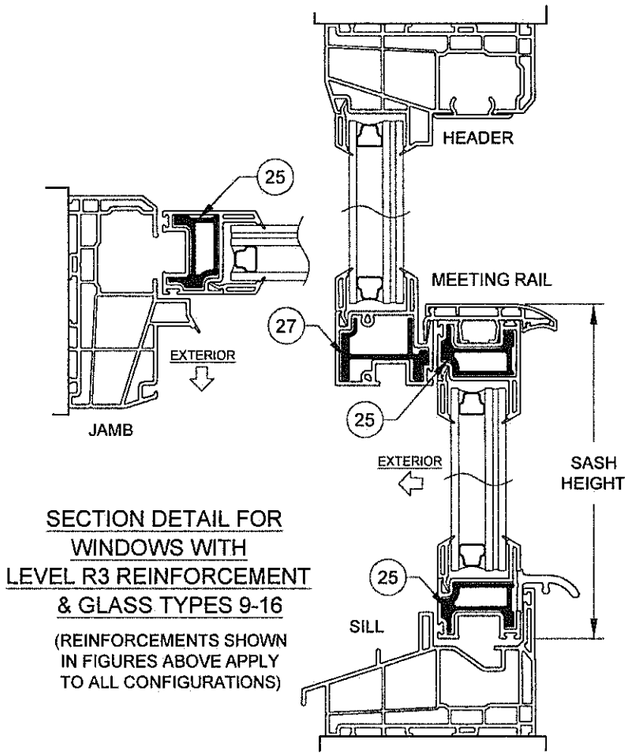


SECTION DETAIL FOR WINDOWS WITH LEVEL R3 REINFORCEMENT & GLASS TYPES 9-16

(REINFORCEMENTS SHOWN IN FIGURES ABOVE APPLY TO ALL CONFIGURATIONS)

- GLASS TYPES 9 THROUGH 16 MAY NOT BE USED WITH J-CHANNEL OR INTEGRAL FIN FRAMES

NOTES:

1) USE THESE TABLES FOR ALL WINDOWS INSTALLED THROUGH THE FRAME.

2) FRAME DIMENSIONS ARE BUCK. SASH HEIGHT IS AS PER THE FIGURE.

3) FOR SIZES NOT SHOWN, ROUND UP TO THE NEXT AVAILABLE WIDTH OR HEIGHT DIMENSION SHOWN ON THE TABLE.

ANTHONY LYNN MILLER LICENSE No. 58705 STATE OF FLORIDA PROFESSIONAL ENGINEER 3/13/20

A. LYNN MILLER, P.E.
P.E.# 58705

PGT®
1070 TECHNOLOGY DRIVE
N. VENICE, FL 34275
(941)-480-1600

REGISTRATION #29296

**PRODUCT REVISED**
**as complying with the Florida Building Code**
**NOA-No. 20-0401.03**
**Expiration Date: 07/30/2025**
**By:** Manuel Perez
**Miami-Dade Product Control**

*Revision:*
C) SASH HEIGHT CORRECTION.
AK - 03/10/20

*Description:* DESIGN PRESSURE TABLES

*Drawn By:* J ROSOWSKI

*Title:* SINGLE HUNG WINDOW INSTALLATION - LM

*Date:* 05/15/15

| *Series/Model:* | *Scale:* | *Sheet:* | *Drawing No.* | *Rev:* |
|---|---|---|---|---|
| SH-5500 | NTS | 7 OF 13 | MD-SH5500-01 | C |

TABLE 9:

FOR ANCHOR GROUP D, TABLE 10, SHEET 9 MAY BE USED.

| Anchor Quantities Required for "Through-Frame" Installation | | | Anchor Group A | | | | | | | | | | | | | | | | | | | | | Anchor Group B | | | | | | | | | | | | | | | | | | | | | Anchor Group C | | | | | | | | | | | | | | | | | | | | |
|---|---|---|---|---|---|---|---|---|---|---|---|---|---|---|---|---|---|---|---|---|---|---|---|---|---|---|---|---|---|---|---|---|---|---|---|---|---|---|---|---|---|---|---|---|---|---|---|---|---|---|---|---|---|---|---|---|---|---|---|---|---|---|---|---|---|
| | | | 18" Wide | | | 24" Wide | | | 32" Wide | | | 36" Wide | | | 40" Wide | | | 48" Wide | | | 52-1/8" Wide | | | 18" Wide | | | 24" Wide | | | 32" Wide | | | 36" Wide | | | 40" Wide | | | 48" Wide | | | 52-1/8" Wide | | | 18" Wide | | | 24" Wide | | | 32" Wide | | | 36" Wide | | | 40" Wide | | | 48" Wide | | | 52-1/8" Wide | | |
| | | | Jamb | | | Jamb | | | Jamb | | | Jamb | | | Jamb | | | Jamb | | | Jamb | | | Jamb | | | Jamb | | | Jamb | | | Jamb | | | Jamb | | | Jamb | | | Jamb | | | Jamb | | | Jamb | | | Jamb | | | Jamb | | | Jamb | | | Jamb | | | Jamb | | |
| Glass Types 5, 6, 7 & 8 Reinf. Level R1 — Window Buck Height (in) | Bottom Sash Description for given Range @ Window Height Shown | Sash Height Range (in) | Above MR | Below MR | Header | Above MR | Below MR | Header | Above MR | Below MR | Header | Above MR | Below MR | Header | Above MR | Below MR | Header | Above MR | Below MR | Header | Above MR | Below MR | Header | Above MR | Below MR | Header | Above MR | Below MR | Header | Above MR | Below MR | Header | Above MR | Below MR | Header | Above MR | Below MR | Header | Above MR | Below MR | Header | Above MR | Below MR | Header | Above MR | Below MR | Header | Above MR | Below MR | Header | Above MR | Below MR | Header | Above MR | Below MR | Header | Above MR | Below MR | Header | Above MR | Below MR | Header | Above MR | Below MR | Header |
| 23.5 | Equal-lite | 11.394 | 1 | 2 | 1 | 1 | 2 | 1 | 1 | 2 | 2 | 1 | 2 | 2 | 1 | 2 | 2 | 1 | 2 | 2 | 1 | 2 | 2 | 1 | 2 | 1 | 1 | 2 | 1 | 1 | 2 | 2 | 1 | 2 | 2 | 1 | 2 | 2 | 1 | 2 | 2 | 1 | 2 | 2 | 1 | 2 | 1 | 1 | 2 | 1 | 1 | 2 | 2 | 1 | 2 | 2 | 1 | 2 | 2 | 1 | 2 | 2 | 1 | 2 | 2 |
| 28 | Standard Cottage | 14.517 - 15.870 | 1 | 2 | 1 | 1 | 2 | 1 | 1 | 2 | 2 | 1 | 2 | 2 | 1 | 2 | 2 | 1 | 2 | 2 | 1 | 2 | 2 | 1 | 2 | 1 | 1 | 2 | 1 | 1 | 2 | 2 | 1 | 2 | 2 | 1 | 2 | 2 | 1 | 2 | 2 | 1 | 2 | 2 | 1 | 2 | 1 | 1 | 2 | 1 | 1 | 2 | 2 | 1 | 2 | 2 | 1 | 2 | 2 | 1 | 2 | 2 | 1 | 2 | 2 |
| | Equal-lite | 11.583 - 14.516 | 1 | 2 | 1 | 1 | 2 | 1 | 1 | 2 | 2 | 1 | 2 | 2 | 1 | 2 | 2 | 1 | 2 | 2 | 1 | 2 | 2 | 1 | 2 | 1 | 1 | 2 | 1 | 1 | 2 | 2 | 1 | 2 | 2 | 1 | 2 | 2 | 1 | 2 | 2 | 1 | 2 | 2 | 1 | 2 | 1 | 1 | 2 | 1 | 1 | 2 | 2 | 1 | 2 | 2 | 1 | 2 | 2 | 1 | 2 | 2 | 1 | 2 | 2 |
| | Standard Proview | 11.377 - 11.582 | 2 | 2 | 1 | 2 | 2 | 1 | 2 | 2 | 2 | 2 | 2 | 2 | 2 | 2 | 2 | 2 | 2 | 2 | 2 | 2 | 2 | 2 | 2 | 1 | 2 | 2 | 1 | 2 | 2 | 2 | 2 | 2 | 2 | 2 | 2 | 2 | 2 | 2 | 2 | 2 | 2 | 2 | 2 | 2 | 1 | 2 | 2 | 1 | 2 | 2 | 2 | 2 | 2 | 2 | 2 | 2 | 2 | 2 | 2 | 2 | 2 | 2 | 2 |
| 37.375 | Tallest | 23.517 - 25.286 | 1 | 2 | 1 | 1 | 2 | 1 | 1 | 2 | 2 | 1 | 2 | 2 | 1 | 2 | 2 | 1 | 2 | 2 | 1 | 3 | 2 | 1 | 2 | 1 | 1 | 2 | 1 | 1 | 2 | 2 | 1 | 2 | 2 | 1 | 2 | 2 | 1 | 2 | 2 | 1 | 2 | 2 | 1 | 2 | 1 | 1 | 2 | 1 | 1 | 2 | 2 | 1 | 2 | 2 | 1 | 2 | 2 | 1 | 2 | 2 | 1 | 2 | 2 |
| | Standard Cottage | 20.958 - 23.516 | 1 | 2 | 1 | 1 | 2 | 1 | 1 | 2 | 2 | 1 | 2 | 2 | 1 | 2 | 2 | 1 | 2 | 2 | 1 | 2 | 2 | 1 | 2 | 1 | 1 | 2 | 1 | 1 | 2 | 2 | 1 | 2 | 2 | 1 | 2 | 2 | 1 | 2 | 2 | 1 | 2 | 2 | 1 | 2 | 1 | 1 | 2 | 1 | 1 | 2 | 2 | 1 | 2 | 2 | 1 | 2 | 2 | 1 | 2 | 2 | 1 | 2 | 2 |
| | Equal-lite | 17.517 - 20.957 | 2 | 2 | 1 | 2 | 2 | 1 | 2 | 2 | 2 | 2 | 2 | 2 | 2 | 2 | 2 | 2 | 2 | 2 | 2 | 2 | 2 | 2 | 2 | 1 | 2 | 2 | 1 | 2 | 2 | 2 | 2 | 2 | 2 | 2 | 2 | 2 | 2 | 2 | 2 | 2 | 2 | 2 | 2 | 2 | 1 | 2 | 2 | 1 | 2 | 2 | 2 | 2 | 2 | 2 | 2 | 2 | 2 | 2 | 2 | 2 | 2 | 2 | 2 |
| | Standard Proview | 14.517 - 17.516 | 2 | 2 | 1 | 2 | 2 | 1 | 2 | 2 | 2 | 2 | 2 | 2 | 2 | 2 | 2 | 2 | 2 | 2 | 2 | 2 | 2 | 2 | 2 | 1 | 2 | 2 | 1 | 2 | 2 | 2 | 2 | 2 | 2 | 2 | 2 | 2 | 2 | 2 | 2 | 2 | 2 | 2 | 2 | 2 | 1 | 2 | 2 | 1 | 2 | 2 | 2 | 2 | 2 | 2 | 2 | 2 | 2 | 2 | 2 | 2 | 2 | 2 | 2 |
| | Shortest | 11.377 - 14.516 | 2 | 2 | 1 | 2 | 2 | 1 | 2 | 2 | 2 | 2 | 2 | 2 | 2 | 2 | 2 | 2 | 2 | 2 | 2 | 2 | 2 | 2 | 2 | 1 | 2 | 2 | 1 | 2 | 2 | 2 | 2 | 2 | 2 | 2 | 2 | 2 | 2 | 2 | 2 | 2 | 2 | 2 | 2 | 2 | 1 | 2 | 2 | 1 | 2 | 2 | 2 | 2 | 2 | 2 | 2 | 2 | 2 | 2 | 2 | 2 | 2 | 2 | 2 |
| 44 | Tallest | 27.583 - 31.911 | 1 | 3 | 1 | 1 | 3 | 1 | 1 | 3 | 2 | 1 | 3 | 2 | 1 | 3 | 2 | 1 | 3 | 2 | 1 | 3 | 2 | 1 | 3 | 1 | 1 | 3 | 1 | 1 | 3 | 2 | 1 | 3 | 2 | 1 | 3 | 2 | 1 | 3 | 2 | 1 | 3 | 2 | 1 | 3 | 1 | 1 | 3 | 1 | 1 | 3 | 2 | 1 | 3 | 2 | 1 | 3 | 2 | 1 | 3 | 2 | 1 | 3 | 2 |
| | Custom Size | 26.517 - 27.582 | 2 | 3 | 1 | 2 | 3 | 1 | 2 | 3 | 2 | 2 | 3 | 2 | 2 | 3 | 2 | 2 | 3 | 2 | 2 | 3 | 2 | 2 | 3 | 1 | 2 | 3 | 1 | 2 | 3 | 2 | 2 | 3 | 2 | 2 | 3 | 2 | 2 | 3 | 2 | 2 | 3 | 2 | 2 | 3 | 1 | 2 | 3 | 1 | 2 | 3 | 2 | 2 | 3 | 2 | 2 | 3 | 2 | 2 | 3 | 2 | 2 | 3 | 2 |
| | Standard Cottage | 23.517 - 26.516 | 2 | 3 | 1 | 2 | 3 | 1 | 2 | 3 | 2 | 2 | 3 | 2 | 2 | 3 | 2 | 2 | 3 | 2 | 2 | 3 | 2 | 2 | 3 | 1 | 2 | 3 | 1 | 2 | 3 | 2 | 2 | 3 | 2 | 2 | 3 | 2 | 2 | 3 | 2 | 2 | 3 | 2 | 2 | 3 | 1 | 2 | 3 | 1 | 2 | 3 | 2 | 2 | 3 | 2 | 2 | 3 | 2 | 2 | 3 | 2 | 2 | 3 | 2 |
| | Equal-lite | 20.517 - 23.516 | 2 | 2 | 1 | 2 | 2 | 1 | 2 | 2 | 2 | 2 | 2 | 2 | 2 | 2 | 2 | 2 | 2 | 2 | 2 | 2 | 2 | 2 | 2 | 1 | 2 | 2 | 1 | 2 | 2 | 2 | 2 | 2 | 2 | 2 | 2 | 2 | 2 | 2 | 2 | 2 | 2 | 2 | 2 | 2 | 1 | 2 | 2 | 1 | 2 | 2 | 2 | 2 | 2 | 2 | 2 | 2 | 2 | 2 | 2 | 2 | 2 | 2 | 2 |
| | Standard Proview | 17.517 - 20.516 | 2 | 2 | 1 | 2 | 2 | 1 | 2 | 2 | 2 | 2 | 2 | 2 | 2 | 2 | 2 | 2 | 2 | 2 | 2 | 2 | 2 | 2 | 2 | 1 | 2 | 2 | 1 | 2 | 2 | 2 | 2 | 2 | 2 | 2 | 2 | 2 | 2 | 2 | 2 | 2 | 2 | 2 | 2 | 2 | 1 | 2 | 2 | 1 | 2 | 2 | 2 | 2 | 2 | 2 | 2 | 2 | 2 | 2 | 2 | 2 | 2 | 2 | 2 |
| | Custom Size | 14.517 - 17.516 | 3 | 2 | 1 | 3 | 2 | 1 | 3 | 2 | 2 | 3 | 2 | 2 | 3 | 2 | 2 | 3 | 2 | 2 | 3 | 2 | 2 | 3 | 2 | 1 | 3 | 2 | 1 | 3 | 2 | 2 | 3 | 2 | 2 | 3 | 2 | 2 | 3 | 2 | 2 | 3 | 2 | 2 | 3 | 2 | 1 | 3 | 2 | 1 | 3 | 2 | 2 | 3 | 2 | 2 | 3 | 2 | 2 | 3 | 2 | 2 | 3 | 2 | 2 |
| | Shortest | 11.377 - 14.516 | 3 | 2 | 1 | 3 | 2 | 1 | 3 | 2 | 2 | 3 | 2 | 2 | 3 | 2 | 2 | 3 | 2 | 2 | 3 | 2 | 2 | 3 | 2 | 1 | 3 | 2 | 1 | 3 | 2 | 2 | 3 | 2 | 2 | 3 | 2 | 2 | 3 | 2 | 2 | 3 | 2 | 2 | 3 | 2 | 1 | 3 | 2 | 1 | 3 | 2 | 2 | 3 | 2 | 2 | 3 | 2 | 2 | 3 | 2 | 2 | 3 | 2 | 2 |
| 48 | Tallest | 31.583 - 35.911 | 1 | 3 | 1 | 1 | 3 | 1 | 1 | 3 | 2 | 1 | 3 | 2 | 1 | 3 | 2 | 1 | 3 | 2 | 1 | 3 | 2 | 1 | 3 | 1 | 1 | 3 | 1 | 1 | 3 | 2 | 1 | 3 | 2 | 1 | 3 | 2 | 1 | 3 | 2 | 1 | 3 | 2 | 1 | 3 | 1 | 1 | 3 | 1 | 1 | 3 | 2 | 1 | 3 | 2 | 1 | 3 | 2 | 1 | 3 | 2 | 1 | 3 | 2 |
| | Standard Cottage | 26.517 - 31.582 | 2 | 3 | 1 | 2 | 3 | 1 | 2 | 3 | 2 | 2 | 3 | 2 | 2 | 3 | 2 | 2 | 3 | 2 | 2 | 3 | 2 | 2 | 3 | 1 | 2 | 3 | 1 | 2 | 3 | 2 | 2 | 3 | 2 | 2 | 3 | 2 | 2 | 3 | 2 | 2 | 3 | 2 | 2 | 3 | 1 | 2 | 3 | 1 | 2 | 3 | 2 | 2 | 3 | 2 | 2 | 3 | 2 | 2 | 3 | 2 | 2 | 3 | 2 |
| | Equal-lite | 20.517 - 26.516 | 2 | 3 | 1 | 2 | 3 | 1 | 2 | 3 | 2 | 2 | 3 | 2 | 2 | 3 | 2 | 2 | 3 | 2 | 2 | 3 | 2 | 2 | 3 | 1 | 2 | 3 | 1 | 2 | 3 | 2 | 2 | 3 | 2 | 2 | 3 | 2 | 2 | 3 | 2 | 2 | 3 | 2 | 2 | 3 | 1 | 2 | 3 | 1 | 2 | 3 | 2 | 2 | 3 | 2 | 2 | 3 | 2 | 2 | 3 | 2 | 2 | 3 | 2 |
| | Standard Proview | 17.517 - 20.516 | 3 | 2 | 1 | 3 | 2 | 1 | 3 | 2 | 2 | 3 | 2 | 2 | 3 | 2 | 2 | 3 | 2 | 2 | 3 | 2 | 2 | 3 | 2 | 1 | 3 | 2 | 1 | 3 | 2 | 2 | 3 | 2 | 2 | 3 | 2 | 2 | 3 | 2 | 2 | 3 | 2 | 2 | 3 | 2 | 1 | 3 | 2 | 1 | 3 | 2 | 2 | 3 | 2 | 2 | 3 | 2 | 2 | 3 | 2 | 2 | 3 | 2 | 2 |
| | Custom Size | 14.517 - 17.516 | 3 | 2 | 1 | 3 | 2 | 1 | 3 | 2 | 2 | 3 | 2 | 2 | 3 | 2 | 2 | 3 | 2 | 2 | 3 | 2 | 2 | 3 | 2 | 1 | 3 | 2 | 1 | 3 | 2 | 2 | 3 | 2 | 2 | 3 | 2 | 2 | 3 | 2 | 2 | 3 | 2 | 2 | 3 | 2 | 1 | 3 | 2 | 1 | 3 | 2 | 2 | 3 | 2 | 2 | 3 | 2 | 2 | 3 | 2 | 2 | 3 | 2 | 2 |
| | Custom Size | 12.517 - 14.516 | 3 | 2 | 1 | 3 | 2 | 1 | 3 | 2 | 2 | 3 | 2 | 2 | 3 | 2 | 2 | 3 | 2 | 2 | 3 | 2 | 2 | 3 | 2 | 1 | 3 | 2 | 1 | 3 | 2 | 2 | 3 | 2 | 2 | 3 | 2 | 2 | 3 | 2 | 2 | 3 | 2 | 2 | 3 | 2 | 1 | 3 | 2 | 1 | 3 | 2 | 2 | 3 | 2 | 2 | 3 | 2 | 2 | 3 | 2 | 2 | 3 | 2 | 2 |
| | Shortest | 11.377 - 12.516 | 3 | 2 | 1 | 3 | 2 | 1 | 3 | 2 | 2 | 3 | 2 | 2 | 3 | 2 | 2 | 3 | 2 | 2 | 3 | 2 | 2 | 3 | 2 | 1 | 3 | 2 | 1 | 3 | 2 | 2 | 3 | 2 | 2 | 3 | 2 | 2 | 3 | 2 | 2 | 3 | 2 | 2 | 3 | 2 | 1 | 3 | 2 | 1 | 3 | 2 | 2 | 3 | 2 | 2 | 3 | 2 | 2 | 3 | 2 | 2 | 3 | 2 | 2 |
| 49 625 | Tallest | 33.208 - 37.536 | 1 | 3 | 1 | 1 | 3 | 1 | 1 | 3 | 2 | 1 | 3 | 2 | 1 | 3 | 2 | 1 | 3 | 2 | 1 | 4 | 2 | 1 | 3 | 1 | 1 | 3 | 1 | 1 | 3 | 2 | 1 | 3 | 2 | 1 | 3 | 2 | 1 | 3 | 2 | 1 | 3 | 2 | 1 | 3 | 1 | 1 | 3 | 1 | 1 | 3 | 2 | 1 | 3 | 2 | 1 | 3 | 2 | 1 | 3 | 2 | 1 | 3 | 2 |
| | Standard Cottage | 26.517 - 33.207 | 2 | 3 | 1 | 2 | 3 | 1 | 2 | 3 | 2 | 2 | 3 | 2 | 2 | 3 | 2 | 2 | 3 | 2 | 2 | 3 | 2 | 2 | 3 | 1 | 2 | 3 | 1 | 2 | 3 | 2 | 2 | 3 | 2 | 2 | 3 | 2 | 2 | 3 | 2 | 2 | 3 | 2 | 2 | 3 | 1 | 2 | 3 | 1 | 2 | 3 | 2 | 2 | 3 | 2 | 2 | 3 | 2 | 2 | 3 | 2 | 2 | 3 | 2 |
| | Equal-lite | 23.517 - 26.516 | 2 | 3 | 1 | 2 | 3 | 1 | 2 | 3 | 2 | 2 | 3 | 2 | 2 | 3 | 2 | 2 | 3 | 2 | 2 | 3 | 2 | 2 | 3 | 1 | 2 | 3 | 1 | 2 | 3 | 2 | 2 | 3 | 2 | 2 | 3 | 2 | 2 | 3 | 2 | 2 | 3 | 2 | 2 | 3 | 1 | 2 | 3 | 1 | 2 | 3 | 2 | 2 | 3 | 2 | 2 | 3 | 2 | 2 | 3 | 2 | 2 | 3 | 2 |
| | Custom Size | 20.517 - 23.516 | 3 | 2 | 1 | 3 | 2 | 1 | 3 | 2 | 2 | 3 | 2 | 2 | 3 | 2 | 2 | 3 | 2 | 2 | 3 | 2 | 2 | 3 | 2 | 1 | 3 | 2 | 1 | 3 | 2 | 2 | 3 | 2 | 2 | 3 | 2 | 2 | 3 | 2 | 2 | 3 | 2 | 2 | 3 | 2 | 1 | 3 | 2 | 1 | 3 | 2 | 2 | 3 | 2 | 2 | 3 | 2 | 2 | 3 | 2 | 2 | 3 | 2 | 2 |
| | Standard Proview | 17.517 - 20.516 | 3 | 2 | 1 | 3 | 2 | 1 | 3 | 2 | 2 | 3 | 2 | 2 | 3 | 2 | 2 | 3 | 2 | 2 | 3 | 2 | 2 | 3 | 2 | 1 | 3 | 2 | 1 | 3 | 2 | 2 | 3 | 2 | 2 | 3 | 2 | 2 | 3 | 2 | 2 | 3 | 2 | 2 | 3 | 2 | 1 | 3 | 2 | 1 | 3 | 2 | 2 | 3 | 2 | 2 | 3 | 2 | 2 | 3 | 2 | 2 | 3 | 2 | 2 |
| | Custom Size | 14.517 - 17.516 | 3 | 2 | 1 | 3 | 2 | 1 | 3 | 2 | 2 | 3 | 2 | 2 | 3 | 2 | 2 | 3 | 2 | 2 | 3 | 2 | 2 | 3 | 2 | 1 | 3 | 2 | 1 | 3 | 2 | 2 | 3 | 2 | 2 | 3 | 2 | 2 | 3 | 2 | 2 | 3 | 2 | 2 | 3 | 2 | 1 | 3 | 2 | 1 | 3 | 2 | 2 | 3 | 2 | 2 | 3 | 2 | 2 | 3 | 2 | 2 | 3 | 2 | 2 |
| | Custom Size | 12.517 - 14.516 | 3 | 2 | 1 | 3 | 2 | 1 | 3 | 2 | 2 | 3 | 2 | 2 | 3 | 2 | 2 | 3 | 2 | 2 | 3 | 2 | 2 | 3 | 2 | 1 | 3 | 2 | 1 | 3 | 2 | 2 | 3 | 2 | 2 | 3 | 2 | 2 | 3 | 2 | 2 | 3 | 2 | 2 | 3 | 2 | 1 | 3 | 2 | 1 | 3 | 2 | 2 | 3 | 2 | 2 | 3 | 2 | 2 | 3 | 2 | 2 | 3 | 2 | 2 |
| | Shortest | 11.377 - 12.516 | 3 | 2 | 1 | 3 | 2 | 1 | 3 | 2 | 2 | 3 | 2 | 2 | 3 | 2 | 2 | 3 | 2 | 2 | 3 | 2 | 2 | 3 | 2 | 1 | 3 | 2 | 1 | 3 | 2 | 2 | 3 | 2 | 2 | 3 | 2 | 2 | 3 | 2 | 2 | 3 | 2 | 2 | 3 | 2 | 1 | 3 | 2 | 1 | 3 | 2 | 2 | 3 | 2 | 2 | 3 | 2 | 2 | 3 | 2 | 2 | 3 | 2 | 2 |
| 62 | Tallest | 36.517 - 41.644 | 2 | 4 | 1 | 2 | 4 | 1 | 2 | 4 | 2 | 2 | 4 | 2 | 2 | 4 | 2 | 2 | 4 | 2 | 2 | 4 | 2 | 2 | 4 | 1 | 2 | 4 | 1 | 2 | 4 | 2 | 2 | 4 | 2 | 2 | 4 | 2 | 2 | 4 | 2 | 2 | 4 | 2 | 2 | 4 | 1 | 2 | 4 | 1 | 2 | 4 | 2 | 2 | 4 | 2 | 2 | 4 | 2 | 2 | 4 | 2 | 2 | 4 | 2 |
| | Standard Cottage | 31.517 - 36.516 | 3 | 3 | 1 | 3 | 3 | 1 | 3 | 3 | 2 | 3 | 3 | 2 | 3 | 3 | 2 | 3 | 3 | 2 | 3 | 3 | 2 | 3 | 3 | 1 | 3 | 3 | 1 | 3 | 3 | 2 | 3 | 3 | 2 | 3 | 3 | 2 | 3 | 3 | 2 | 3 | 3 | 2 | 3 | 3 | 1 | 3 | 3 | 1 | 3 | 3 | 2 | 3 | 3 | 2 | 3 | 3 | 2 | 3 | 3 | 2 | 3 | 3 | 2 |
| | Equal-lite | 26.517 - 31.516 | 3 | 3 | 1 | 3 | 3 | 1 | 3 | 3 | 2 | 3 | 3 | 2 | 3 | 3 | 2 | 3 | 3 | 2 | 3 | 3 | 2 | 3 | 3 | 1 | 3 | 3 | 1 | 3 | 3 | 2 | 3 | 3 | 2 | 3 | 3 | 2 | 3 | 3 | 2 | 3 | 3 | 2 | 3 | 3 | 1 | 3 | 3 | 1 | 3 | 3 | 2 | 3 | 3 | 2 | 3 | 3 | 2 | 3 | 3 | 2 | 3 | 3 | 2 |
| | Standard Proview | 23.517 - 26.516 | 3 | 3 | 1 | 3 | 3 | 1 | 3 | 3 | 2 | 3 | 3 | 2 | 3 | 3 | 2 | 3 | 3 | 2 | 3 | 3 | 2 | 3 | 3 | 1 | 3 | 3 | 1 | 3 | 3 | 2 | 3 | 3 | 2 | 3 | 3 | 2 | 3 | 3 | 2 | 3 | 3 | 2 | 3 | 3 | 1 | 3 | 3 | 1 | 3 | 3 | 2 | 3 | 3 | 2 | 3 | 3 | 2 | 3 | 3 | 2 | 3 | 3 | 2 |
| | Custom Size | 20.517 - 23.516 | 3 | 2 | 1 | 3 | 2 | 1 | 3 | 2 | 2 | 3 | 2 | 2 | 3 | 2 | 2 | 3 | 2 | 2 | 3 | 2 | 2 | 3 | 2 | 1 | 3 | 2 | 1 | 3 | 2 | 2 | 3 | 2 | 2 | 3 | 2 | 2 | 3 | 2 | 2 | 3 | 2 | 2 | 3 | 2 | 1 | 3 | 2 | 1 | 3 | 2 | 2 | 3 | 2 | 2 | 3 | 2 | 2 | 3 | 2 | 2 | 3 | 2 | 2 |
| | Custom Size | 17.517 - 20.516 | 3 | 2 | 1 | 3 | 2 | 1 | 3 | 2 | 2 | 3 | 2 | 2 | 3 | 2 | 2 | 3 | 2 | 2 | 3 | 2 | 2 | 3 | 2 | 1 | 3 | 2 | 1 | 3 | 2 | 2 | 3 | 2 | 2 | 3 | 2 | 2 | 3 | 2 | 2 | 3 | 2 | 2 | 3 | 2 | 1 | 3 | 2 | 1 | 3 | 2 | 2 | 3 | 2 | 2 | 3 | 2 | 2 | 3 | 2 | 2 | 3 | 2 | 2 |
| | Custom Size | 14.517 - 17.516 | 4 | 2 | 1 | 4 | 2 | 1 | 4 | 2 | 2 | 4 | 2 | 2 | 4 | 2 | 2 | 4 | 2 | 2 | 4 | 2 | 3 | 4 | 2 | 1 | 4 | 2 | 1 | 4 | 2 | 2 | 4 | 2 | 2 | 4 | 2 | 2 | 4 | 2 | 2 | 4 | 2 | 2 | 4 | 2 | 1 | 4 | 2 | 1 | 4 | 2 | 2 | 4 | 2 | 2 | 4 | 2 | 2 | 4 | 2 | 2 | 4 | 2 | 2 |
| | Custom Size | 13.017 - 14.516 | 4 | 2 | 1 | 4 | 2 | 1 | 4 | 2 | 2 | 4 | 2 | 2 | 4 | 2 | 2 | 4 | 2 | 2 | 4 | 2 | 3 | 4 | 2 | 1 | 4 | 2 | 1 | 4 | 2 | 2 | 4 | 2 | 2 | 4 | 2 | 2 | 4 | 2 | 2 | 4 | 2 | 2 | 4 | 2 | 1 | 4 | 2 | 1 | 4 | 2 | 2 | 4 | 2 | 2 | 4 | 2 | 2 | 4 | 2 | 2 | 4 | 2 | 2 |
| | Shortest | 11.864 - 13.016 | 4 | 2 | 1 | 4 | 2 | 1 | 4 | 2 | 2 | 4 | 2 | 2 | 4 | 2 | 2 | 4 | 2 | 2 | 4 | 2 | 3 | 4 | 2 | 1 | 4 | 2 | 1 | 4 | 2 | 2 | 4 | 2 | 2 | 4 | 2 | 2 | 4 | 2 | 2 | 4 | 2 | 2 | 4 | 2 | 1 | 4 | 2 | 1 | 4 | 2 | 2 | 4 | 2 | 2 | 4 | 2 | 2 | 4 | 2 | 2 | 4 | 2 | 2 |
| 75 | Tallest | 39.517 - 41.644 | 3 | 4 | 1 | 3 | 4 | 1 | 3 | 4 | 2 | 3 | 4 | 2 | 3 | 4 | 2 | 3 | 4 | 2 | 3 | 4 | 2 | 3 | 4 | 1 | 3 | 4 | 1 | 3 | 4 | 2 | 3 | 4 | 2 | 3 | 4 | 2 | 3 | 4 | 2 | 3 | 4 | 2 | 3 | 4 | 1 | 3 | 4 | 1 | 3 | 4 | 2 | 3 | 4 | 2 | 3 | 4 | 2 | 3 | 4 | 2 | 3 | 4 | 2 |
| | Custom Size | 38.517 - 39.516 | 3 | 4 | 1 | 3 | 4 | 1 | 3 | 4 | 2 | 3 | 4 | 2 | 3 | 4 | 2 | 3 | 4 | 2 | 3 | 4 | 2 | 3 | 4 | 1 | 3 | 4 | 1 | 3 | 4 | 2 | 3 | 4 | 2 | 3 | 4 | 2 | 3 | 4 | 2 | 3 | 4 | 2 | 3 | 4 | 1 | 3 | 4 | 1 | 3 | 4 | 2 | 3 | 4 | 2 | 3 | 4 | 2 | 3 | 4 | 2 | 3 | 4 | 2 |
| | Equal-lite | 35.517 - 38.516 | 3 | 3 | 1 | 3 | 3 | 1 | 3 | 3 | 2 | 3 | 3 | 2 | 3 | 3 | 2 | 3 | 3 | 2 | 3 | 4 | 2 | 3 | 3 | 1 | 3 | 3 | 1 | 3 | 3 | 2 | 3 | 3 | 2 | 3 | 3 | 2 | 3 | 3 | 2 | 3 | 3 | 2 | 3 | 3 | 1 | 3 | 3 | 1 | 3 | 3 | 2 | 3 | 3 | 2 | 3 | 3 | 2 | 3 | 3 | 2 | 3 | 3 | 2 |
| | Custom Size | 32.517 - 35.516 | 3 | 3 | 1 | 3 | 3 | 1 | 3 | 3 | 2 | 3 | 3 | 2 | 3 | 3 | 2 | 3 | 3 | 2 | 3 | 3 | 2 | 3 | 3 | 1 | 3 | 3 | 1 | 3 | 3 | 2 | 3 | 3 | 2 | 3 | 3 | 2 | 3 | 3 | 2 | 3 | 3 | 2 | 3 | 3 | 1 | 3 | 3 | 1 | 3 | 3 | 2 | 3 | 3 | 2 | 3 | 3 | 2 | 3 | 3 | 2 | 3 | 3 | 2 |
| | Standard Proview | 29.517 - 32.516 | 3 | 3 | 1 | 3 | 3 | 1 | 3 | 3 | 2 | 3 | 3 | 2 | 3 | 3 | 2 | 3 | 3 | 2 | 3 | 3 | 3 | 3 | 3 | 1 | 3 | 3 | 1 | 3 | 3 | 2 | 3 | 3 | 2 | 3 | 3 | 2 | 3 | 3 | 2 | 3 | 3 | 2 | 3 | 3 | 1 | 3 | 3 | 1 | 3 | 3 | 2 | 3 | 3 | 2 | 3 | 3 | 2 | 3 | 3 | 2 | 3 | 3 | 2 |
| | Custom Size | 26.517 - 29.516 | 4 | 3 | 1 | 4 | 3 | 1 | 4 | 3 | 2 | 4 | 3 | 2 | 4 | 3 | 2 | 4 | 3 | 2 | 4 | 3 | 3 | 4 | 3 | 1 | 4 | 3 | 1 | 4 | 3 | 2 | 4 | 3 | 2 | 4 | 3 | 2 | 4 | 3 | 2 | 4 | 3 | 2 | 4 | 3 | 1 | 4 | 3 | 1 | 4 | 3 | 2 | 4 | 3 | 2 | 4 | 3 | 2 | 4 | 3 | 2 | 4 | 3 | 2 |
| | Shortest | 25.516 - 26.516 | 4 | 3 | 1 | 4 | 3 | 1 | 4 | 3 | 2 | 4 | 3 | 2 | 4 | 3 | 2 | 4 | 3 | 2 | 4 | 3 | 3 | 4 | 3 | 1 | 4 | 3 | 1 | 4 | 3 | 2 | 4 | 3 | 2 | 4 | 3 | 2 | 4 | 3 | 2 | 4 | 3 | 2 | 4 | 3 | 1 | 4 | 3 | 1 | 4 | 3 | 2 | 4 | 3 | 2 | 4 | 3 | 2 | 4 | 3 | 2 | 4 | 3 | 2 |
| 84 | Equal-lite | 38.517 - 41.644 | 3 | 4 | 1 | 3 | 4 | 1 | 3 | 4 | 2 | 3 | 4 | 2 | 3 | 4 | 2 | 3 | 4 | 2 | 3 | 4 | 3 | 3 | 4 | 1 | 3 | 4 | 1 | 3 | 4 | 2 | 3 | 4 | 2 | 3 | 4 | 2 | 3 | 4 | 2 | 3 | 4 | 2 | 3 | 4 | 1 | 3 | 4 | 1 | 3 | 4 | 2 | 3 | 4 | 2 | 3 | 4 | 2 | 3 | 4 | 2 | 3 | 4 | 2 |
| | Custom Size | 35.517 - 38.516 | 4 | 3 | 1 | 4 | 3 | 1 | 4 | 3 | 2 | 4 | 3 | 2 | 4 | 3 | 2 | 4 | 3 | 2 | 4 | 4 | 3 | 4 | 3 | 1 | 4 | 3 | 1 | 4 | 3 | 2 | 4 | 3 | 2 | 4 | 3 | 2 | 4 | 3 | 2 | 4 | 3 | 2 | 4 | 3 | 1 | 4 | 3 | 1 | 4 | 3 | 2 | 4 | 3 | 2 | 4 | 3 | 2 | 4 | 3 | 2 | 4 | 3 | 2 |
| | Standard Proview | 33.818 - 35.516 | 4 | 3 | 1 | 4 | 3 | 1 | 4 | 3 | 2 | 4 | 3 | 2 | 4 | 3 | 2 | 4 | 3 | 2 | 4 | 3 | 3 | 4 | 3 | 1 | 4 | 3 | 1 | 4 | 3 | 2 | 4 | 3 | 2 | 4 | 3 | 2 | 4 | 3 | 2 | 4 | 3 | 2 | 4 | 3 | 1 | 4 | 3 | 1 | 4 | 3 | 2 | 4 | 3 | 2 | 4 | 3 | 2 | 4 | 3 | 2 | 4 | 3 | 2 |
| 91.78 | Tallest | ** - 41.644 | 4 | 4 | 1 | 4 | 4 | 1 | 4 | 4 | 2 | 4 | 4 | 2 | 4 | 4 | 2 | 4 | 4 | 2 | 4 | 4 | 3 | 4 | 4 | 1 | 4 | 4 | 1 | 4 | 4 | 2 | 4 | 4 | 2 | 4 | 4 | 2 | 4 | 4 | 2 | 4 | 4 | 2 | 4 | 4 | 1 | 4 | 4 | 1 | 4 | 4 | 2 | 4 | 4 | 2 | 4 | 4 | 2 | 4 | 4 | 2 | 4 | 4 | 2 |

SEE TABLE 4, SHEET 6 FOR DESIGN PRESSURES WHEN USING THIS TABLE.

** MIN. SASH HEIGHT = WINDOW BUCK HEIGHT - 50.136

(APPLIES TO ANY HEIGHT 91.78" OR LESS)

| Max. Anchor O.C. Spacing for "Integral-Fin" Installation | Anchor Group E | Anchor Group F |
|---|---|---|
| | 3.6" | 4" |

NOTES:

1) USE THE ABOVE *"ANCHOR QUANTITIES REQUIRED.........."* TABLE FOR ANCHORS INSTALLED THROUGH THE FRAME.

2) USE THE ABOVE *"MAX. ANCHOR O.C. SPACING.........."* TABLE FOR ANCHORS INSTALLED THROUGH THE INTEGRAL FIN.

3) FRAME DIMENSIONS ARE BUCK. "MR" = MEETING RAIL.

4) FOR SIZES NOT SHOWN, ROUND UP TO THE NEXT AVAILABLE WIDTH OR HEIGHT DIMENSION SHOWN ON THE TABLE.

5) REFER TO TABLES 2 & 3, SHEET 2 FOR ANCHOR GROUP DESCRIPTIONS.

ANTHONY LYNN MILLER
LICENSE
No. 58705
3/13/20
STATE OF FLORIDA
PROFESSIONAL ENGINEER

A. LYNN MILLER, P.E.
P.E.# 58705


1070 TECHNOLOGY DRIVE
N. VENICE, FL 34275
(941)-480-1600


REGISTRATION #29296

Revision:
C) NO CHANGES THIS SHEET.
AK - 03/10/20

**PRODUCT REVISED**
as complying with the Florida Building Code
NOA-No. 20-0401.03
Expiration Date: 07/30/2025
By: Manuel Perez
Miami-Dade Product Control

| Description: | Drawn By: |
|---|---|
| ANCHOR QUANTITY TABLE | J ROSOWSKI |

| Title: | Date: |
|---|---|
| SINGLE HUNG WINDOW INSTALLATION - LM | 05/15/15 |

| Series/Model: | Scale: | Sheet: | Drawing No. | Rev: |
|---|---|---|---|---|
| SH-5500 | NTS | 8 OF 13 | MD-SH5500-01 | C |

TABLE 10:

**Anchor Quantities Required for "Through-Frame" Installation** — Anchor Group B

| Glass Types 5, 6, 7 & 8 Reinf. Level R2 — Window Buck Height (in) | Bottom Sash Description for given Range @ Window Height Shown | Sash Height Range (in) | 18" Wide Jamb Above MR | 18" Wide Jamb Below MR | 18" Wide Header | 24" Wide Jamb Above MR | 24" Wide Jamb Below MR | 24" Wide Header | 32" Wide Jamb Above MR | 32" Wide Jamb Below MR | 32" Wide Header | 36" Wide Jamb Above MR | 36" Wide Jamb Below MR | 36" Wide Header | 40" Wide Jamb Above MR | 40" Wide Jamb Below MR | 40" Wide Header | 48" Wide Jamb Above MR | 48" Wide Jamb Below MR | 48" Wide Header | 52-1/8" Wide Jamb Above MR | 52-1/8" Wide Jamb Below MR | 52-1/8" Wide Header |
|---|---|---|---|---|---|---|---|---|---|---|---|---|---|---|---|---|---|---|---|---|---|---|---|
| 23.5 | Equal-lite | 11.394 | 1 | 2 | 1 | 1 | 2 | 1 | 1 | 2 | 2 | 1 | 2 | 2 | 1 | 2 | 2 | 1 | 2 | 2 | 1 | 2 | 2 |
| 28 | Standard Cottage | 14.517 - 15.870 | 1 | 2 | 1 | 1 | 2 | 1 | 1 | 2 | 2 | 1 | 2 | 2 | 1 | 2 | 2 | 1 | 2 | 2 | 1 | 2 | 2 |
| | Equal-lite | 11.583 - 14.516 | 1 | 2 | 1 | 1 | 2 | 1 | 1 | 2 | 2 | 1 | 2 | 2 | 1 | 2 | 2 | 1 | 2 | 2 | 1 | 2 | 2 |
| | Standard Proview | 11.377 - 11.582 | 2 | 2 | 1 | 2 | 2 | 1 | 2 | 2 | 2 | 2 | 2 | 2 | 2 | 2 | 2 | 2 | 2 | 2 | 2 | 2 | 2 |
| 37.375 | Tallest | 23.517 - 25.286 | 1 | 2 | 1 | 1 | 2 | 1 | 1 | 2 | 2 | 1 | 2 | 2 | 1 | 2 | 2 | 1 | 2 | 2 | 1 | 2 | 2 |
| | Standard Cottage | 20.958 - 23.516 | 1 | 2 | 1 | 1 | 2 | 1 | 1 | 2 | 2 | 1 | 2 | 2 | 1 | 2 | 2 | 1 | 2 | 2 | 1 | 2 | 2 |
| | Equal-lite | 17.517 - 20.957 | 2 | 2 | 1 | 2 | 2 | 1 | 2 | 2 | 2 | 2 | 2 | 2 | 2 | 2 | 2 | 2 | 2 | 2 | 2 | 2 | 2 |
| | Standard Proview | 14.517 - 17.516 | 2 | 2 | 1 | 2 | 2 | 1 | 2 | 2 | 2 | 2 | 2 | 2 | 2 | 2 | 2 | 2 | 2 | 2 | 2 | 2 | 2 |
| | Shortest | 11.377 - 14.516 | 2 | 2 | 1 | 2 | 2 | 1 | 2 | 2 | 2 | 2 | 2 | 2 | 2 | 2 | 2 | 2 | 2 | 2 | 2 | 2 | 2 |
| 44 | Tallest | 27.583 - 31.911 | 1 | 3 | 1 | 1 | 3 | 1 | 1 | 3 | 2 | 1 | 3 | 2 | 1 | 3 | 2 | 1 | 3 | 2 | 1 | 3 | 2 |
| | Custom Size | 26.517 - 27.582 | 2 | 3 | 1 | 2 | 3 | 1 | 2 | 3 | 2 | 2 | 3 | 2 | 2 | 3 | 2 | 2 | 3 | 2 | 2 | 3 | 2 |
| | Standard Cottage | 23.517 - 26.516 | 2 | 3 | 1 | 2 | 3 | 1 | 2 | 3 | 2 | 2 | 3 | 2 | 2 | 3 | 2 | 2 | 3 | 2 | 2 | 3 | 2 |
| | Equal-lite | 20.517 - 23.516 | 2 | 2 | 1 | 2 | 2 | 1 | 2 | 2 | 2 | 2 | 2 | 2 | 2 | 2 | 2 | 2 | 2 | 2 | 2 | 2 | 2 |
| | Standard Proview | 17.517 - 20.516 | 2 | 2 | 1 | 2 | 2 | 1 | 2 | 2 | 2 | 2 | 2 | 2 | 2 | 2 | 2 | 2 | 2 | 2 | 2 | 2 | 2 |
| | Custom Size | 14.517 - 17.516 | 3 | 2 | 1 | 3 | 2 | 1 | 3 | 2 | 2 | 3 | 2 | 2 | 3 | 2 | 2 | 3 | 2 | 2 | 3 | 2 | 2 |
| | Shortest | 11.377 - 14.516 | 3 | 2 | 1 | 3 | 2 | 1 | 3 | 2 | 2 | 3 | 2 | 2 | 3 | 2 | 2 | 3 | 2 | 2 | 3 | 2 | 2 |
| 48 | Tallest | 31.583 - 35.911 | 1 | 3 | 1 | 1 | 3 | 1 | 1 | 3 | 2 | 1 | 3 | 2 | 1 | 3 | 2 | 1 | 3 | 2 | 1 | 3 | 2 |
| | Standard Cottage | 26.517 - 31.582 | 2 | 3 | 1 | 2 | 3 | 1 | 2 | 3 | 2 | 2 | 3 | 2 | 2 | 3 | 2 | 2 | 3 | 2 | 2 | 3 | 2 |
| | Equal-lite | 20.517 - 26.516 | 2 | 3 | 1 | 2 | 3 | 1 | 2 | 3 | 2 | 2 | 3 | 2 | 2 | 3 | 2 | 2 | 3 | 2 | 2 | 3 | 2 |
| | Standard Proview | 17.517 - 20.516 | 3 | 2 | 1 | 3 | 2 | 1 | 3 | 2 | 2 | 3 | 2 | 2 | 3 | 2 | 2 | 3 | 2 | 2 | 3 | 2 | 2 |
| | Custom Size | 14.517 - 17.516 | 3 | 2 | 1 | 3 | 2 | 1 | 3 | 2 | 2 | 3 | 2 | 2 | 3 | 2 | 2 | 3 | 2 | 2 | 3 | 2 | 2 |
| | Custom Size | 12.517 - 14.516 | 3 | 2 | 1 | 3 | 2 | 1 | 3 | 2 | 2 | 3 | 2 | 2 | 3 | 2 | 2 | 3 | 2 | 2 | 3 | 2 | 2 |
| | Shortest | 11.377 - 12.516 | 3 | 2 | 1 | 3 | 2 | 1 | 3 | 2 | 2 | 3 | 2 | 2 | 3 | 2 | 2 | 3 | 2 | 2 | 3 | 2 | 2 |
| 49.625 | Tallest | 33.208 - 37.536 | 1 | 3 | 1 | 1 | 3 | 1 | 1 | 3 | 2 | 1 | 3 | 2 | 1 | 3 | 2 | 1 | 3 | 2 | 1 | 3 | 2 |
| | Standard Cottage | 26.517 - 33.207 | 2 | 3 | 1 | 2 | 3 | 1 | 2 | 3 | 2 | 2 | 3 | 2 | 2 | 3 | 2 | 2 | 3 | 2 | 2 | 3 | 2 |
| | Equal-lite | 23.517 - 26.516 | 2 | 3 | 1 | 2 | 3 | 1 | 2 | 3 | 2 | 2 | 3 | 2 | 2 | 3 | 2 | 2 | 3 | 2 | 2 | 3 | 2 |
| | Custom Size | 20.517 - 23.516 | 3 | 2 | 1 | 3 | 2 | 1 | 3 | 2 | 2 | 3 | 2 | 2 | 3 | 2 | 2 | 3 | 2 | 2 | 3 | 2 | 2 |
| | Standard Proview | 17.517 - 20.516 | 3 | 2 | 1 | 3 | 2 | 1 | 3 | 2 | 2 | 3 | 2 | 2 | 3 | 2 | 2 | 3 | 2 | 2 | 3 | 2 | 2 |
| | Custom Size | 14.517 - 17.516 | 3 | 2 | 1 | 3 | 2 | 1 | 3 | 2 | 2 | 3 | 2 | 2 | 3 | 2 | 2 | 3 | 2 | 2 | 3 | 2 | 2 |
| | Custom Size | 12.517 - 14.516 | 3 | 2 | 1 | 3 | 2 | 1 | 3 | 2 | 2 | 3 | 2 | 2 | 3 | 2 | 2 | 3 | 2 | 2 | 3 | 2 | 2 |
| | Shortest | 11.377 - 12.516 | 3 | 2 | 1 | 3 | 2 | 1 | 3 | 2 | 2 | 3 | 2 | 2 | 3 | 2 | 2 | 3 | 2 | 2 | 3 | 2 | 2 |
| 62 | Tallest | 36.517 - 41.644 | 2 | 4 | 1 | 2 | 4 | 1 | 2 | 4 | 2 | 2 | 4 | 2 | 2 | 4 | 2 | 2 | 4 | 2 | 2 | 4 | 2 |
| | Standard Cottage | 31.517 - 36.516 | 3 | 3 | 1 | 3 | 3 | 1 | 3 | 3 | 2 | 3 | 3 | 2 | 3 | 3 | 2 | 3 | 3 | 2 | 3 | 3 | 2 |
| | Equal-lite | 26.517 - 31.516 | 3 | 3 | 1 | 3 | 3 | 1 | 3 | 3 | 2 | 3 | 3 | 2 | 3 | 3 | 2 | 3 | 3 | 2 | 3 | 3 | 2 |
| | Standard Proview | 23.517 - 26.516 | 3 | 3 | 1 | 3 | 3 | 1 | 3 | 3 | 2 | 3 | 3 | 2 | 3 | 3 | 2 | 3 | 3 | 2 | 3 | 3 | 2 |
| | Custom Size | 20.517 - 23.516 | 3 | 2 | 1 | 3 | 2 | 1 | 3 | 2 | 2 | 3 | 2 | 2 | 3 | 2 | 2 | 3 | 2 | 2 | 3 | 2 | 2 |
| | Custom Size | 17.517 - 20.516 | 3 | 2 | 1 | 3 | 2 | 1 | 3 | 2 | 2 | 3 | 2 | 2 | 3 | 2 | 2 | 3 | 2 | 2 | 3 | 2 | 2 |
| | Custom Size | 14.517 - 17.516 | 4 | 2 | 1 | 4 | 2 | 1 | 4 | 2 | 2 | 4 | 2 | 2 | 4 | 2 | 2 | 4 | 2 | 2 | 4 | 2 | 2 |
| | Custom Size | 13.017 - 14.516 | 4 | 2 | 1 | 4 | 2 | 1 | 4 | 2 | 2 | 4 | 2 | 2 | 4 | 2 | 2 | 4 | 2 | 2 | 4 | 2 | 2 |
| | Shortest | 11.864 - 13.016 | 4 | 2 | 1 | 4 | 2 | 1 | 4 | 2 | 2 | 4 | 2 | 2 | 4 | 2 | 2 | 4 | 2 | 2 | 4 | 2 | 2 |
| 75 | Tallest | 39.517 - 41.644 | 3 | 4 | 1 | 3 | 4 | 1 | 3 | 4 | 2 | 3 | 4 | 2 | 3 | 4 | 2 | 3 | 4 | 2 | 3 | 4 | 2 |
| | Custom Size | 38.517 - 39.516 | 3 | 4 | 1 | 3 | 4 | 1 | 3 | 4 | 2 | 3 | 4 | 2 | 3 | 4 | 2 | 3 | 4 | 2 | 3 | 4 | 2 |
| | Equal-lite | 35.517 - 38.516 | 3 | 3 | 1 | 3 | 3 | 1 | 3 | 3 | 2 | 3 | 3 | 2 | 3 | 3 | 2 | 3 | 3 | 2 | 3 | 3 | 2 |
| | Custom Size | 32.517 - 35.516 | 3 | 3 | 1 | 3 | 3 | 1 | 3 | 3 | 2 | 3 | 3 | 2 | 3 | 3 | 2 | 3 | 3 | 2 | 3 | 3 | 2 |
| | Standard Proview | 29.517 - 32.516 | 3 | 3 | 1 | 3 | 3 | 1 | 3 | 3 | 2 | 3 | 3 | 2 | 3 | 3 | 2 | 3 | 3 | 2 | 3 | 3 | 2 |
| | Custom Size | 26.517 - 29.516 | 4 | 3 | 1 | 4 | 3 | 1 | 4 | 3 | 2 | 4 | 3 | 2 | 4 | 3 | 2 | 4 | 3 | 2 | 4 | 3 | 2 |
| | Shortest | 25.516 - 26.516 | 4 | 3 | 1 | 4 | 3 | 1 | 4 | 3 | 2 | 4 | 3 | 2 | 4 | 3 | 2 | 4 | 3 | 2 | 4 | 3 | 2 |
| 84 | Equal-lite | 38.517 - 41.644 | 3 | 4 | 1 | 3 | 4 | 1 | 3 | 4 | 2 | 3 | 4 | 2 | 3 | 4 | 2 | 3 | 4 | 2 | 3 | 4 | 2 |
| | Custom Size | 35.517 - 38.516 | 4 | 3 | 1 | 4 | 3 | 1 | 4 | 3 | 2 | 4 | 3 | 2 | 4 | 3 | 2 | 4 | 3 | 2 | 4 | 3 | 2 |
| | Standard Proview | 33.818 - 35.516 | 4 | 3 | 1 | 4 | 3 | 1 | 4 | 3 | 2 | 4 | 3 | 2 | 4 | 3 | 2 | 4 | 3 | 2 | 4 | 3 | 2 |
| 91.78 | Tallest | ** - 41.644 | 4 | 4 | 1 | 4 | 4 | 1 | 4 | 4 | 2 | 4 | 4 | 2 | 4 | 4 | 2 | 4 | 4 | 2 | 4 | 4 | 2 |

Anchor Group C

| Window Buck Height (in) | Bottom Sash Description | Sash Height Range (in) | 18" Wide Jamb Above MR | 18" Wide Jamb Below MR | 18" Wide Header | 24" Wide Jamb Above MR | 24" Wide Jamb Below MR | 24" Wide Header | 32" Wide Jamb Above MR | 32" Wide Jamb Below MR | 32" Wide Header | 36" Wide Jamb Above MR | 36" Wide Jamb Below MR | 36" Wide Header | 40" Wide Jamb Above MR | 40" Wide Jamb Below MR | 40" Wide Header | 48" Wide Jamb Above MR | 48" Wide Jamb Below MR | 48" Wide Header | 52-1/8" Wide Jamb Above MR | 52-1/8" Wide Jamb Below MR | 52-1/8" Wide Header |
|---|---|---|---|---|---|---|---|---|---|---|---|---|---|---|---|---|---|---|---|---|---|---|---|
| 23.5 | Equal-lite | 11.394 | 1 | 2 | 1 | 1 | 2 | 1 | 1 | 2 | 2 | 1 | 2 | 2 | 1 | 2 | 2 | 1 | 2 | 2 | 1 | 2 | 2 |
| 28 | Standard Cottage | 14.517 - 15.870 | 1 | 2 | 1 | 1 | 2 | 1 | 1 | 2 | 2 | 1 | 2 | 2 | 1 | 2 | 2 | 1 | 2 | 2 | 1 | 2 | 2 |
| | Equal-lite | 11.583 - 14.516 | 1 | 2 | 1 | 1 | 2 | 1 | 1 | 2 | 2 | 1 | 2 | 2 | 1 | 2 | 2 | 1 | 2 | 2 | 1 | 2 | 2 |
| | Standard Proview | 11.377 - 11.582 | 2 | 2 | 1 | 2 | 2 | 1 | 2 | 2 | 2 | 2 | 2 | 2 | 2 | 2 | 2 | 2 | 2 | 2 | 2 | 2 | 2 |
| 37.375 | Tallest | 23.517 - 25.286 | 1 | 2 | 1 | 1 | 2 | 1 | 1 | 2 | 2 | 1 | 2 | 2 | 1 | 2 | 2 | 1 | 3 | 2 | 1 | 3 | 2 |
| | Standard Cottage | 20.958 - 23.516 | 1 | 2 | 1 | 1 | 2 | 1 | 1 | 2 | 2 | 1 | 2 | 2 | 1 | 2 | 2 | 1 | 2 | 2 | 1 | 3 | 2 |
| | Equal-lite | 17.517 - 20.957 | 2 | 2 | 1 | 2 | 2 | 1 | 2 | 2 | 2 | 2 | 2 | 2 | 2 | 2 | 2 | 2 | 2 | 2 | 2 | 2 | 2 |
| | Standard Proview | 14.517 - 17.516 | 2 | 2 | 1 | 2 | 2 | 1 | 2 | 2 | 2 | 2 | 2 | 2 | 2 | 2 | 2 | 2 | 2 | 2 | 2 | 2 | 2 |
| | Shortest | 11.377 - 14.516 | 2 | 2 | 1 | 2 | 2 | 1 | 2 | 2 | 2 | 2 | 2 | 2 | 2 | 2 | 2 | 2 | 2 | 2 | 2 | 2 | 2 |
| 44 | Tallest | 27.583 - 31.911 | 1 | 3 | 1 | 1 | 3 | 1 | 1 | 3 | 2 | 1 | 3 | 2 | 1 | 3 | 2 | 1 | 3 | 2 | 1 | 3 | 2 |
| | Custom Size | 26.517 - 27.582 | 2 | 3 | 1 | 2 | 3 | 1 | 2 | 3 | 2 | 2 | 3 | 2 | 2 | 3 | 2 | 2 | 3 | 2 | 2 | 3 | 2 |
| | Standard Cottage | 23.517 - 26.516 | 2 | 3 | 1 | 2 | 3 | 1 | 2 | 3 | 2 | 2 | 3 | 2 | 2 | 3 | 2 | 2 | 3 | 2 | 2 | 3 | 2 |
| | Equal-lite | 20.517 - 23.516 | 2 | 2 | 1 | 2 | 2 | 1 | 2 | 2 | 2 | 2 | 2 | 2 | 2 | 2 | 2 | 2 | 2 | 2 | 2 | 3 | 2 |
| | Standard Proview | 17.517 - 20.516 | 2 | 2 | 1 | 2 | 2 | 1 | 2 | 2 | 2 | 2 | 2 | 2 | 2 | 2 | 2 | 2 | 2 | 2 | 2 | 2 | 2 |
| | Custom Size | 14.517 - 17.516 | 3 | 2 | 1 | 3 | 2 | 1 | 3 | 2 | 2 | 3 | 2 | 2 | 3 | 2 | 2 | 3 | 2 | 2 | 3 | 2 | 2 |
| | Shortest | 11.377 - 14.516 | 3 | 2 | 1 | 3 | 2 | 1 | 3 | 2 | 2 | 3 | 2 | 2 | 3 | 2 | 2 | 3 | 2 | 2 | 3 | 2 | 2 |
| 48 | Tallest | 31.583 - 35.911 | 1 | 3 | 1 | 1 | 3 | 1 | 1 | 3 | 2 | 1 | 3 | 2 | 1 | 3 | 2 | 1 | 3 | 2 | 1 | 4 | 2 |
| | Standard Cottage | 26.517 - 31.582 | 2 | 3 | 1 | 2 | 3 | 1 | 2 | 3 | 2 | 2 | 3 | 2 | 2 | 3 | 2 | 2 | 3 | 2 | 2 | 3 | 2 |
| | Equal-lite | 20.517 - 26.516 | 2 | 3 | 1 | 2 | 3 | 1 | 2 | 3 | 2 | 2 | 3 | 2 | 2 | 3 | 2 | 2 | 3 | 2 | 2 | 3 | 2 |
| | Standard Proview | 17.517 - 20.516 | 3 | 2 | 1 | 3 | 2 | 1 | 3 | 2 | 2 | 3 | 2 | 2 | 3 | 2 | 2 | 3 | 2 | 2 | 3 | 2 | 2 |
| | Custom Size | 14.517 - 17.516 | 3 | 2 | 1 | 3 | 2 | 1 | 3 | 2 | 2 | 3 | 2 | 2 | 3 | 2 | 2 | 3 | 2 | 2 | 3 | 2 | 2 |
| | Custom Size | 12.517 - 14.516 | 3 | 2 | 1 | 3 | 2 | 1 | 3 | 2 | 2 | 3 | 2 | 2 | 3 | 2 | 2 | 3 | 2 | 2 | 3 | 2 | 2 |
| | Shortest | 11.377 - 12.516 | 3 | 2 | 1 | 3 | 2 | 1 | 3 | 2 | 2 | 3 | 2 | 2 | 3 | 2 | 2 | 3 | 2 | 2 | 3 | 2 | 2 |
| 49.625 | Tallest | 33.208 - 37.536 | 1 | 3 | 1 | 1 | 3 | 1 | 1 | 3 | 2 | 1 | 3 | 2 | 1 | 3 | 2 | 1 | 3 | 2 | 1 | 4 | 2 |
| | Standard Cottage | 26.517 - 33.207 | 2 | 3 | 1 | 2 | 3 | 1 | 2 | 3 | 2 | 2 | 3 | 2 | 2 | 3 | 2 | 2 | 3 | 2 | 2 | 3 | 2 |
| | Equal-lite | 23.517 - 26.516 | 2 | 3 | 1 | 2 | 3 | 1 | 2 | 3 | 2 | 2 | 3 | 2 | 2 | 3 | 2 | 2 | 3 | 2 | 2 | 3 | 2 |
| | Custom Size | 20.517 - 23.516 | 3 | 2 | 1 | 3 | 2 | 1 | 3 | 2 | 2 | 3 | 2 | 2 | 3 | 2 | 2 | 3 | 2 | 2 | 3 | 3 | 2 |
| | Standard Proview | 17.517 - 20.516 | 3 | 2 | 1 | 3 | 2 | 1 | 3 | 2 | 2 | 3 | 2 | 2 | 3 | 2 | 2 | 3 | 2 | 2 | 3 | 2 | 2 |
| | Custom Size | 14.517 - 17.516 | 3 | 2 | 1 | 3 | 2 | 1 | 3 | 2 | 2 | 3 | 2 | 2 | 3 | 2 | 2 | 3 | 2 | 2 | 3 | 2 | 2 |
| | Custom Size | 12.517 - 14.516 | 3 | 2 | 1 | 3 | 2 | 1 | 3 | 2 | 2 | 3 | 2 | 2 | 3 | 2 | 2 | 3 | 2 | 2 | 3 | 2 | 2 |
| | Shortest | 11.377 - 12.516 | 3 | 2 | 1 | 3 | 2 | 1 | 3 | 2 | 2 | 3 | 2 | 2 | 3 | 2 | 2 | 3 | 2 | 2 | 3 | 2 | 3 |
| 62 | Tallest | 36.517 - 41.644 | 2 | 4 | 1 | 2 | 4 | 1 | 2 | 4 | 2 | 2 | 4 | 2 | 2 | 4 | 2 | 2 | 4 | 2 | 2 | 4 | 2 |
| | Standard Cottage | 31.517 - 36.516 | 3 | 3 | 1 | 3 | 3 | 1 | 3 | 3 | 2 | 3 | 3 | 2 | 3 | 3 | 2 | 3 | 3 | 2 | 3 | 4 | 2 |
| | Equal-lite | 26.517 - 31.516 | 3 | 3 | 1 | 3 | 3 | 1 | 3 | 3 | 2 | 3 | 3 | 2 | 3 | 3 | 2 | 3 | 3 | 2 | 3 | 3 | 2 |
| | Standard Proview | 23.517 - 26.516 | 3 | 3 | 1 | 3 | 3 | 1 | 3 | 3 | 2 | 3 | 3 | 2 | 3 | 3 | 2 | 3 | 3 | 2 | 3 | 3 | 3 |
| | Custom Size | 20.517 - 23.516 | 3 | 2 | 1 | 3 | 2 | 1 | 3 | 2 | 2 | 3 | 2 | 2 | 3 | 2 | 2 | 3 | 2 | 2 | 3 | 3 | 3 |
| | Custom Size | 17.517 - 20.516 | 3 | 2 | 1 | 3 | 2 | 1 | 3 | 2 | 2 | 3 | 2 | 2 | 3 | 2 | 2 | 3 | 2 | 2 | 3 | 2 | 3 |
| | Custom Size | 14.517 - 17.516 | 4 | 2 | 1 | 4 | 2 | 1 | 4 | 2 | 2 | 4 | 2 | 2 | 4 | 2 | 2 | 4 | 2 | 2 | 4 | 2 | 3 |
| | Custom Size | 13.017 - 14.516 | 4 | 2 | 1 | 4 | 2 | 1 | 4 | 2 | 2 | 4 | 2 | 2 | 4 | 2 | 2 | 4 | 2 | 2 | 4 | 2 | 3 |
| | Shortest | 11.864 - 13.016 | 4 | 2 | 1 | 4 | 2 | 1 | 4 | 2 | 2 | 4 | 2 | 2 | 4 | 2 | 2 | 4 | 2 | 2 | 4 | 2 | 3 |
| 75 | Tallest | 39.517 - 41.644 | 3 | 4 | 1 | 3 | 4 | 1 | 3 | 4 | 2 | 3 | 4 | 2 | 3 | 4 | 2 | 3 | 4 | 2 | 3 | 4 | 2 |
| | Custom Size | 38.517 - 39.516 | 3 | 4 | 1 | 3 | 4 | 1 | 3 | 4 | 2 | 3 | 4 | 2 | 3 | 4 | 2 | 3 | 4 | 2 | 3 | 4 | 2 |
| | Equal-lite | 35.517 - 38.516 | 3 | 3 | 1 | 3 | 3 | 1 | 3 | 3 | 2 | 3 | 3 | 2 | 3 | 3 | 2 | 3 | 4 | 2 | 3 | 4 | 3 |
| | Custom Size | 32.517 - 35.516 | 3 | 3 | 1 | 3 | 3 | 1 | 3 | 3 | 2 | 3 | 3 | 2 | 3 | 3 | 2 | 3 | 3 | 2 | 3 | 4 | 3 |
| | Standard Proview | 29.517 - 32.516 | 3 | 3 | 1 | 3 | 3 | 1 | 3 | 3 | 2 | 3 | 3 | 2 | 3 | 3 | 2 | 3 | 3 | 2 | 3 | 3 | 3 |
| | Custom Size | 26.517 - 29.516 | 4 | 3 | 1 | 4 | 3 | 1 | 4 | 3 | 2 | 4 | 3 | 2 | 4 | 3 | 2 | 4 | 3 | 2 | 4 | 3 | 3 |
| | Shortest | 25.516 - 26.516 | 4 | 3 | 1 | 4 | 3 | 1 | 4 | 3 | 2 | 4 | 3 | 2 | 4 | 3 | 2 | 4 | 3 | 2 | 4 | 3 | 3 |
| 84 | Equal-lite | 38.517 - 41.644 | 3 | 4 | 1 | 3 | 4 | 1 | 3 | 4 | 2 | 3 | 4 | 2 | 3 | 4 | 2 | 3 | 4 | 2 | 3 | 4 | 3 |
| | Custom Size | 35.517 - 38.516 | 4 | 3 | 1 | 4 | 3 | 1 | 4 | 3 | 2 | 4 | 3 | 2 | 4 | 3 | 2 | 4 | 4 | 2 | 4 | 4 | 3 |
| | Standard Proview | 33.818 - 35.516 | 4 | 3 | 1 | 4 | 3 | 1 | 4 | 3 | 2 | 4 | 3 | 2 | 4 | 3 | 2 | 4 | 3 | 2 | 4 | 4 | 3 |
| 91.78 | Tallest | ** - 41.644 | 4 | 4 | 1 | 4 | 4 | 1 | 4 | 4 | 2 | 4 | 4 | 2 | 4 | 4 | 2 | 4 | 4 | 2 | 4 | 4 | 3 |

Anchor Group D

| Window Buck Height (in) | Bottom Sash Description | Sash Height Range (in) | 18" Wide Jamb Above MR | 18" Wide Jamb Below MR | 18" Wide Header | 24" Wide Jamb Above MR | 24" Wide Jamb Below MR | 24" Wide Header | 32" Wide Jamb Above MR | 32" Wide Jamb Below MR | 32" Wide Header | 36" Wide Jamb Above MR | 36" Wide Jamb Below MR | 36" Wide Header | 40" Wide Jamb Above MR | 40" Wide Jamb Below MR | 40" Wide Header | 48" Wide Jamb Above MR | 48" Wide Jamb Below MR | 48" Wide Header | 52-1/8" Wide Jamb Above MR | 52-1/8" Wide Jamb Below MR | 52-1/8" Wide Header |
|---|---|---|---|---|---|---|---|---|---|---|---|---|---|---|---|---|---|---|---|---|---|---|---|
| 23.5 | Equal-lite | 11.394 | 1 | 2 | 1 | 1 | 2 | 1 | 1 | 2 | 2 | 1 | 2 | 2 | 1 | 2 | 2 | 1 | 2 | 2 | 1 | 2 | 2 |
| 28 | Standard Cottage | 14.517 - 15.870 | 1 | 2 | 1 | 1 | 2 | 1 | 1 | 2 | 2 | 1 | 2 | 2 | 1 | 2 | 2 | 1 | 2 | 2 | 1 | 2 | 2 |
| | Equal-lite | 11.583 - 14.516 | 1 | 2 | 1 | 1 | 2 | 1 | 1 | 2 | 2 | 1 | 2 | 2 | 1 | 2 | 2 | 1 | 2 | 2 | 1 | 2 | 2 |
| | Standard Proview | 11.377 - 11.582 | 2 | 2 | 1 | 2 | 2 | 1 | 2 | 2 | 2 | 2 | 2 | 2 | 2 | 2 | 2 | 2 | 2 | 2 | 2 | 2 | 2 |
| 37.375 | Tallest | 23.517 - 25.286 | 1 | 2 | 1 | 1 | 2 | 1 | 1 | 2 | 2 | 1 | 2 | 2 | 1 | 2 | 2 | 1 | 2 | 2 | 1 | 2 | 2 |
| | Standard Cottage | 20.958 - 23.516 | 1 | 2 | 1 | 1 | 2 | 1 | 1 | 2 | 2 | 1 | 2 | 2 | 1 | 2 | 2 | 1 | 2 | 2 | 1 | 2 | 2 |
| | Equal-lite | 17.517 - 20.957 | 2 | 2 | 1 | 2 | 2 | 1 | 2 | 2 | 2 | 2 | 2 | 2 | 2 | 2 | 2 | 2 | 2 | 2 | 2 | 2 | 2 |
| | Standard Proview | 14.517 - 17.516 | 2 | 2 | 1 | 2 | 2 | 1 | 2 | 2 | 2 | 2 | 2 | 2 | 2 | 2 | 2 | 2 | 2 | 2 | 2 | 2 | 2 |
| | Shortest | 11.377 - 14.516 | 2 | 2 | 1 | 2 | 2 | 1 | 2 | 2 | 2 | 2 | 2 | 2 | 2 | 2 | 2 | 2 | 2 | 2 | 2 | 2 | 2 |
| 44 | Tallest | 27.583 - 31.911 | 1 | 3 | 1 | 1 | 3 | 1 | 1 | 3 | 2 | 1 | 3 | 2 | 1 | 3 | 2 | 1 | 3 | 2 | 1 | 3 | 2 |
| | Custom Size | 26.517 - 27.582 | 2 | 3 | 1 | 2 | 3 | 1 | 2 | 3 | 2 | 2 | 3 | 2 | 2 | 3 | 2 | 2 | 3 | 2 | 2 | 3 | 2 |
| | Standard Cottage | 23.517 - 26.516 | 2 | 3 | 1 | 2 | 3 | 1 | 2 | 3 | 2 | 2 | 3 | 2 | 2 | 3 | 2 | 2 | 3 | 2 | 2 | 3 | 2 |
| | Equal-lite | 20.517 - 23.516 | 2 | 2 | 1 | 2 | 2 | 1 | 2 | 2 | 2 | 2 | 2 | 2 | 2 | 2 | 2 | 2 | 2 | 2 | 2 | 2 | 2 |
| | Standard Proview | 17.517 - 20.516 | 2 | 2 | 1 | 2 | 2 | 1 | 2 | 2 | 2 | 2 | 2 | 2 | 2 | 2 | 2 | 2 | 2 | 2 | 2 | 2 | 2 |
| | Custom Size | 14.517 - 17.516 | 3 | 2 | 1 | 3 | 2 | 1 | 3 | 2 | 2 | 3 | 2 | 2 | 3 | 2 | 2 | 3 | 2 | 2 | 3 | 2 | 2 |
| | Shortest | 11.377 - 14.516 | 3 | 2 | 1 | 3 | 2 | 1 | 3 | 2 | 2 | 3 | 2 | 2 | 3 | 2 | 2 | 3 | 2 | 2 | 3 | 2 | 2 |
| 48 | Tallest | 31.583 - 35.911 | 1 | 3 | 1 | 1 | 3 | 1 | 1 | 3 | 2 | 1 | 3 | 2 | 1 | 3 | 2 | 1 | 3 | 2 | 1 | 3 | 2 |
| | Standard Cottage | 26.517 - 31.582 | 2 | 3 | 1 | 2 | 3 | 1 | 2 | 3 | 2 | 2 | 3 | 2 | 2 | 3 | 2 | 2 | 3 | 2 | 2 | 3 | 2 |
| | Equal-lite | 20.517 - 26.516 | 2 | 3 | 1 | 2 | 3 | 1 | 2 | 3 | 2 | 2 | 3 | 2 | 2 | 3 | 2 | 2 | 3 | 2 | 2 | 3 | 2 |
| | Standard Proview | 17.517 - 20.516 | 3 | 2 | 1 | 3 | 2 | 1 | 3 | 2 | 2 | 3 | 2 | 2 | 3 | 2 | 2 | 3 | 2 | 2 | 3 | 2 | 2 |
| | Custom Size | 14.517 - 17.516 | 3 | 2 | 1 | 3 | 2 | 1 | 3 | 2 | 2 | 3 | 2 | 2 | 3 | 2 | 2 | 3 | 2 | 2 | 3 | 2 | 2 |
| | Custom Size | 12.517 - 14.516 | 3 | 2 | 1 | 3 | 2 | 1 | 3 | 2 | 2 | 3 | 2 | 2 | 3 | 2 | 2 | 3 | 2 | 2 | 3 | 2 | 2 |
| | Shortest | 11.377 - 12.516 | 3 | 2 | 1 | 3 | 2 | 1 | 3 | 2 | 2 | 3 | 2 | 2 | 3 | 2 | 2 | 3 | 2 | 2 | 3 | 2 | 2 |
| 49.625 | Tallest | 33.208 - 37.536 | 1 | 3 | 1 | 1 | 3 | 1 | 1 | 3 | 2 | 1 | 3 | 2 | 1 | 3 | 2 | 1 | 3 | 2 | 1 | 3 | 2 |
| | Standard Cottage | 26.517 - 33.207 | 2 | 3 | 1 | 2 | 3 | 1 | 2 | 3 | 2 | 2 | 3 | 2 | 2 | 3 | 2 | 2 | 3 | 2 | 2 | 3 | 2 |
| | Equal-lite | 23.517 - 26.516 | 2 | 3 | 1 | 2 | 3 | 1 | 2 | 3 | 2 | 2 | 3 | 2 | 2 | 3 | 2 | 2 | 3 | 2 | 2 | 3 | 2 |
| | Custom Size | 20.517 - 23.516 | 3 | 2 | 1 | 3 | 2 | 1 | 3 | 2 | 2 | 3 | 2 | 2 | 3 | 2 | 2 | 3 | 2 | 2 | 3 | 2 | 2 |
| | Standard Proview | 17.517 - 20.516 | 3 | 2 | 1 | 3 | 2 | 1 | 3 | 2 | 2 | 3 | 2 | 2 | 3 | 2 | 2 | 3 | 2 | 2 | 3 | 2 | 2 |
| | Custom Size | 14.517 - 17.516 | 3 | 2 | 1 | 3 | 2 | 1 | 3 | 2 | 2 | 3 | 2 | 2 | 3 | 2 | 2 | 3 | 2 | 2 | 3 | 2 | 2 |
| | Custom Size | 12.517 - 14.516 | 3 | 2 | 1 | 3 | 2 | 1 | 3 | 2 | 2 | 3 | 2 | 2 | 3 | 2 | 2 | 3 | 2 | 2 | 3 | 2 | 2 |
| | Shortest | 11.377 - 12.516 | 3 | 2 | 1 | 3 | 2 | 1 | 3 | 2 | 2 | 3 | 2 | 2 | 3 | 2 | 2 | 3 | 2 | 2 | 3 | 2 | 2 |
| 62 | Tallest | 36.517 - 41.644 | 2 | 4 | 1 | 2 | 4 | 1 | 2 | 4 | 2 | 2 | 4 | 2 | 2 | 4 | 2 | 2 | 4 | 2 | 2 | 4 | 2 |
| | Standard Cottage | 31.517 - 36.516 | 3 | 3 | 1 | 3 | 3 | 1 | 3 | 3 | 2 | 3 | 3 | 2 | 3 | 3 | 2 | 3 | 3 | 2 | 3 | 3 | 2 |
| | Equal-lite | 26.517 - 31.516 | 3 | 3 | 1 | 3 | 3 | 1 | 3 | 3 | 2 | 3 | 3 | 2 | 3 | 3 | 2 | 3 | 3 | 2 | 3 | 3 | 2 |
| | Standard Proview | 23.517 - 26.516 | 3 | 3 | 1 | 3 | 3 | 1 | 3 | 3 | 2 | 3 | 3 | 2 | 3 | 3 | 2 | 3 | 3 | 2 | 3 | 3 | 2 |
| | Custom Size | 20.517 - 23.516 | 3 | 2 | 1 | 3 | 2 | 1 | 3 | 2 | 2 | 3 | 2 | 2 | 3 | 2 | 2 | 3 | 2 | 2 | 3 | 2 | 2 |
| | Custom Size | 17.517 - 20.516 | 3 | 2 | 1 | 3 | 2 | 1 | 3 | 2 | 2 | 3 | 2 | 2 | 3 | 2 | 2 | 3 | 2 | 2 | 3 | 2 | 2 |
| | Custom Size | 14.517 - 17.516 | 4 | 2 | 1 | 4 | 2 | 1 | 4 | 2 | 2 | 4 | 2 | 2 | 4 | 2 | 2 | 4 | 2 | 2 | 4 | 2 | 2 |
| | Custom Size | 13.017 - 14.516 | 4 | 2 | 1 | 4 | 2 | 1 | 4 | 2 | 2 | 4 | 2 | 2 | 4 | 2 | 2 | 4 | 2 | 2 | 4 | 2 | 2 |
| | Shortest | 11.864 - 13.016 | 4 | 2 | 1 | 4 | 2 | 1 | 4 | 2 | 2 | 4 | 2 | 2 | 4 | 2 | 2 | 4 | 2 | 2 | 4 | 2 | 2 |
| 75 | Tallest | 39.517 - 41.644 | 3 | 4 | 1 | 3 | 4 | 1 | 3 | 4 | 2 | 3 | 4 | 2 | 3 | 4 | 2 | 3 | 4 | 2 | 3 | 4 | 2 |
| | Custom Size | 38.517 - 39.516 | 3 | 4 | 1 | 3 | 4 | 1 | 3 | 4 | 2 | 3 | 4 | 2 | 3 | 4 | 2 | 3 | 4 | 2 | 3 | 4 | 2 |
| | Equal-lite | 35.517 - 38.516 | 3 | 3 | 1 | 3 | 3 | 1 | 3 | 3 | 2 | 3 | 3 | 2 | 3 | 3 | 2 | 3 | 3 | 2 | 3 | 3 | 2 |
| | Custom Size | 32.517 - 35.516 | 3 | 3 | 1 | 3 | 3 | 1 | 3 | 3 | 2 | 3 | 3 | 2 | 3 | 3 | 2 | 3 | 3 | 2 | 3 | 3 | 2 |
| | Standard Proview | 29.517 - 32.516 | 3 | 3 | 1 | 3 | 3 | 1 | 3 | 3 | 2 | 3 | 3 | 2 | 3 | 3 | 2 | 3 | 3 | 2 | 3 | 3 | 2 |
| | Custom Size | 26.517 - 29.516 | 4 | 3 | 1 | 4 | 3 | 1 | 4 | 3 | 2 | 4 | 3 | 2 | 4 | 3 | 2 | 4 | 3 | 2 | 4 | 3 | 2 |
| | Shortest | 25.516 - 26.516 | 4 | 3 | 1 | 4 | 3 | 1 | 4 | 3 | 2 | 4 | 3 | 2 | 4 | 3 | 2 | 4 | 3 | 2 | 4 | 3 | 2 |
| 84 | Equal-lite | 38.517 - 41.644 | 3 | 4 | 1 | 3 | 4 | 1 | 3 | 4 | 2 | 3 | 4 | 2 | 3 | 4 | 2 | 3 | 4 | 2 | 3 | 4 | 2 |
| | Custom Size | 35.517 - 38.516 | 4 | 3 | 1 | 4 | 3 | 1 | 4 | 3 | 2 | 4 | 3 | 2 | 4 | 3 | 2 | 4 | 3 | 2 | 4 | 3 | 2 |
| | Standard Proview | 33.818 - 35.516 | 4 | 3 | 1 | 4 | 3 | 1 | 4 | 3 | 2 | 4 | 3 | 2 | 4 | 3 | 2 | 4 | 3 | 2 | 4 | 3 | 2 |
| 91.78 | Tallest | ** - 41.644 | 4 | 4 | 1 | 4 | 4 | 1 | 4 | 4 | 2 | 4 | 4 | 2 | 4 | 4 | 2 | 4 | 4 | 2 | 4 | 4 | 2 |

SEE TABLES 5 & 6, SHEET 6 FOR DESIGN PRESSURES WHEN USING THIS TABLE.
** MIN. SASH HEIGHT = WINDOW BUCK HEIGHT - 50.136
(APPLIES TO ANY HEIGHT 91.78" OR LESS)

| Max. Anchor O.C. Spacing for "Integral-Fin" Installation | Anchor Group F |
|---|---|
| | 4" |

NOTES:

1) USE THE ABOVE *"ANCHOR QUANTITIES REQUIRED.........."* TABLE FOR ANCHORS INSTALLED THROUGH THE FRAME.

2) USE THE ABOVE *"MAX. ANCHOR O.C. SPACING.........."* TABLE FOR ANCHORS INSTALLED THROUGH THE INTEGRAL FIN.

3) FRAME DIMENSIONS ARE BUCK. "MR" = MEETING RAIL.

4) FOR SIZES NOT SHOWN, ROUND UP TO THE NEXT AVAILABLE WIDTH OR HEIGHT DIMENSION SHOWN ON THE TABLE.

5) REFER TO TABLES 2 & 3, SHEET 2 FOR ANCHOR GROUP DESCRIPTIONS.

ANTHONY LYNN MILLER
LICENSE
No. 58705
3/13/20
STATE OF FLORIDA
PROFESSIONAL ENGINEER
A. LYNN MILLER, P.E.
P.E.# 58705

1070 TECHNOLOGY DRIVE
N. VENICE, FL 34275
(941)-480-1600
REGISTRATION #29296

**PRODUCT REVISED**
as complying with the Florida Building Code
NOA-No. 20-0401.03
Expiration Date: 07/30/2025
By: Manuel Perez
Miami-Dade Product Control

Revision: C) NO CHANGES THIS SHEET. AK - 03/10/20

| Description: ANCHOR QUANTITY TABLE | Drawn By: J ROSOWSKI |
|---|---|
| Title: SINGLE HUNG WINDOW INSTALLATION - LM | Date: 05/15/15 |

| Series/Model: | Scale: | Sheet: | Drawing No. | Rev: |
|---|---|---|---|---|
| SH-5500 | NTS | 9 OF 13 | MD-SH5500-01 | C |

TABLE 11:

Anchor Quantities Required for "Through-Frame" Installation

**Anchor Group B**

| Window Buck Height (in) — Glass Types 9 - 16 Reinf. Level R3 | Bottom Sash Description for given Range @ Window Height Shown | Sash Height Range (in) | 24" Wide Jamb Above MR | 24" Wide Jamb Below MR | 24" Wide Header | 32" Wide Jamb Above MR | 32" Wide Jamb Below MR | 32" Wide Header | 36" Wide Jamb Above MR | 36" Wide Jamb Below MR | 36" Wide Header | 40" Wide Jamb Above MR | 40" Wide Jamb Below MR | 40" Wide Header | 48" Wide Jamb Above MR | 48" Wide Jamb Below MR | 48" Wide Header | 52-1/8" Wide Jamb Above MR | 52-1/8" Wide Jamb Below MR | 52-1/8" Wide Header | 54" Wide Jamb Above MR | 54" Wide Jamb Below MR | 54" Wide Header |
|---|---|---|---|---|---|---|---|---|---|---|---|---|---|---|---|---|---|---|---|---|---|---|---|
| 23.5 | Equal-lite | 11.394 | 1 | 2 | 1 | 1 | 2 | 2 | 1 | 2 | 2 | 1 | 2 | 2 | 1 | 2 | 2 | 1 | 2 | 2 | 1 | 2 | 2 |
| 28 | Standard Cottage | 14.517 - 15.870 | 1 | 2 | 1 | 1 | 2 | 2 | 1 | 2 | 2 | 1 | 2 | 2 | 1 | 2 | 2 | 1 | 2 | 2 | 1 | 3 | 2 |
| | Equal-lite | 11.583 - 14.516 | 1 | 2 | 1 | 1 | 2 | 2 | 1 | 2 | 2 | 1 | 2 | 2 | 1 | 2 | 2 | 2 | 2 | 2 | 2 | 2 | 2 |
| | Standard Proview | 11.377 - 11.582 | 2 | 2 | 1 | 2 | 2 | 2 | 2 | 2 | 2 | 2 | 2 | 2 | 2 | 2 | 2 | 2 | 2 | 2 | 2 | 2 | 2 |
| 37.375 | Tallest | 23.517 - 25.286 | 1 | 2 | 1 | 1 | 2 | 2 | 1 | 3 | 2 | 1 | 3 | 2 | 1 | 3 | 2 | 1 | 4 | 2 | 1 | 4 | 2 |
| | Standard Cottage | 20.958 - 23.516 | 1 | 2 | 1 | 1 | 2 | 2 | 1 | 2 | 2 | 1 | 3 | 2 | 1 | 3 | 2 | 2 | 3 | 2 | 2 | 3 | 2 |
| | Equal-lite | 17.517 - 20.957 | 2 | 2 | 1 | 2 | 2 | 2 | 2 | 2 | 2 | 2 | 2 | 2 | 2 | 3 | 2 | 2 | 3 | 2 | 2 | 3 | 2 |
| | Standard Proview | 14.517 - 17.516 | 2 | 2 | 1 | 2 | 2 | 2 | 2 | 2 | 2 | 2 | 2 | 2 | 2 | 2 | 2 | 2 | 3 | 3 | 2 | 3 | 3 |
| | Shortest | 11.377 - 14.516 | 2 | 2 | 1 | 2 | 2 | 2 | 2 | 2 | 2 | 2 | 2 | 2 | 2 | 2 | 2 | 2 | 2 | 3 | 2 | 2 | 3 |
| 44 | Tallest | 27.583 - 31.911 | 1 | 3 | 1 | 1 | 3 | 2 | 1 | 3 | 2 | 1 | 3 | 2 | 1 | 4 | 2 | 1 | 4 | 2 | 1 | 4 | 2 |
| | Custom Size | 26.517 - 27.582 | 2 | 3 | 1 | 2 | 3 | 2 | 2 | 3 | 2 | 2 | 3 | 2 | 2 | 4 | 2 | 2 | 4 | 2 | 2 | 4 | 2 |
| | Standard Cottage | 23.517 - 26.516 | 2 | 3 | 1 | 2 | 3 | 2 | 2 | 3 | 2 | 2 | 3 | 2 | 2 | 3 | 2 | 2 | 4 | 2 | 2 | 4 | 2 |
| | Equal-lite | 20.517 - 23.516 | 2 | 2 | 1 | 2 | 2 | 2 | 2 | 2 | 2 | 2 | 3 | 2 | 2 | 3 | 2 | 2 | 3 | 3 | 2 | 3 | 3 |
| | Standard Proview | 17.517 - 20.516 | 2 | 2 | 1 | 2 | 2 | 2 | 2 | 2 | 2 | 2 | 2 | 2 | 2 | 3 | 3 | 2 | 3 | 3 | 2 | 3 | 3 |
| | Custom Size | 14.517 - 17.516 | 3 | 2 | 1 | 3 | 2 | 2 | 3 | 2 | 2 | 3 | 2 | 2 | 3 | 2 | 3 | 3 | 3 | 3 | 3 | 3 | 3 |
| | Shortest | 11.377 - 14.516 | 3 | 2 | 1 | 3 | 2 | 2 | 3 | 2 | 2 | 3 | 2 | 2 | 3 | 2 | 3 | 3 | 2 | 3 | 3 | 2 | 3 |
| 48 | Tallest | 31.583 - 35.911 | 1 | 3 | 1 | 1 | 3 | 2 | 1 | 3 | 2 | 1 | 4 | 2 | 1 | 4 | 2 | 1 | 4 | 2 | 1 | 4 | 2 |
| | Standard Cottage | 26.517 - 31.582 | 2 | 3 | 1 | 2 | 3 | 2 | 2 | 3 | 2 | 2 | 3 | 2 | 2 | 4 | 2 | 2 | 4 | 2 | 2 | 4 | 2 |
| | Equal-lite | 20.517 - 26.516 | 2 | 3 | 1 | 2 | 3 | 2 | 2 | 3 | 2 | 2 | 3 | 2 | 2 | 3 | 3 | 2 | 4 | 3 | 2 | 4 | 3 |
| | Standard Proview | 17.517 - 20.516 | 3 | 2 | 1 | 3 | 2 | 2 | 3 | 2 | 2 | 3 | 2 | 2 | 3 | 3 | 3 | 3 | 3 | 3 | 3 | 3 | 3 |
| | Custom Size | 14.517 - 17.516 | 3 | 2 | 1 | 3 | 2 | 2 | 3 | 2 | 2 | 3 | 2 | 2 | 3 | 2 | 3 | 3 | 3 | 3 | 3 | 3 | 3 |
| | Custom Size | 12.517 - 14.516 | 3 | 2 | 1 | 3 | 2 | 2 | 3 | 2 | 2 | 3 | 2 | 2 | 3 | 2 | 3 | 3 | 2 | 3 | 3 | 2 | 3 |
| | Shortest | 11.377 - 12.516 | 3 | 2 | 1 | 3 | 2 | 2 | 3 | 2 | 2 | 3 | 2 | 2 | 3 | 2 | 3 | 3 | 2 | 3 | 3 | 2 | 3 |
| 49.625 | Tallest | 33.208 - 37.536 | 1 | 3 | 1 | 1 | 3 | 2 | 1 | 4 | 2 | 1 | 4 | 2 | 1 | 4 | 2 | 1 | 4 | 2 | 1 | 4 | 2 |
| | Standard Cottage | 26.517 - 33.207 | 2 | 3 | 1 | 2 | 3 | 2 | 2 | 3 | 2 | 2 | 4 | 2 | 2 | 4 | 2 | 2 | 4 | 3 | 2 | 5 | 3 |
| | Equal-lite | 23.517 - 26.516 | 2 | 3 | 1 | 2 | 3 | 2 | 2 | 3 | 2 | 2 | 3 | 2 | 2 | 3 | 2 | 2 | 4 | 3 | 2 | 4 | 3 |
| | Custom Size | 20.517 - 23.516 | 3 | 2 | 1 | 3 | 2 | 2 | 3 | 2 | 2 | 3 | 3 | 2 | 3 | 3 | 3 | 3 | 3 | 3 | 3 | 3 | 3 |
| | Standard Proview | 17.517 - 20.516 | 3 | 2 | 1 | 3 | 2 | 2 | 3 | 2 | 2 | 3 | 2 | 2 | 3 | 3 | 3 | 3 | 3 | 3 | 3 | 3 | 3 |
| | Custom Size | 14.517 - 17.516 | 3 | 2 | 1 | 3 | 2 | 2 | 3 | 2 | 2 | 3 | 2 | 2 | 3 | 2 | 3 | 3 | 3 | 3 | 3 | 3 | 3 |
| | Custom Size | 12.517 - 14.516 | 3 | 2 | 1 | 3 | 2 | 2 | 3 | 2 | 2 | 3 | 2 | 2 | 3 | 2 | 3 | 3 | 2 | 3 | 3 | 2 | 3 |
| | Shortest | 11.377 - 12.516 | 3 | 2 | 1 | 3 | 2 | 2 | 3 | 2 | 2 | 3 | 2 | 2 | 3 | 2 | 3 | 3 | 2 | 3 | 4 | 2 | 3 |
| 62 | Tallest | 36.517 - 41.644 | 2 | 4 | 1 | 2 | 4 | 2 | 2 | 4 | 2 | 2 | 4 | 2 | 2 | 5 | 2 | 2 | 5 | 3 | 2 | 5 | 3 |
| | Standard Cottage | 31.517 - 36.516 | 3 | 3 | 1 | 3 | 3 | 2 | 3 | 3 | 2 | 3 | 4 | 2 | 3 | 4 | 3 | 3 | 5 | 3 | 3 | 5 | 3 |
| | Equal-lite | 26.517 - 31.516 | 3 | 3 | 1 | 3 | 3 | 2 | 3 | 3 | 2 | 3 | 3 | 2 | 3 | 4 | 3 | 3 | 4 | 3 | 3 | 4 | 3 |
| | Standard Proview | 23.517 - 26.516 | 3 | 3 | 1 | 3 | 3 | 2 | 3 | 3 | 2 | 3 | 3 | 2 | 3 | 3 | 3 | 3 | 4 | 3 | 3 | 4 | 3 |
| | Custom Size | 20.517 - 23.516 | 3 | 2 | 1 | 3 | 2 | 2 | 3 | 2 | 2 | 3 | 3 | 2 | 4 | 3 | 3 | 4 | 3 | 3 | 4 | 3 | 3 |
| | Custom Size | 17.517 - 20.516 | 3 | 2 | 1 | 3 | 2 | 2 | 3 | 2 | 2 | 3 | 2 | 2 | 4 | 3 | 3 | 4 | 3 | 3 | 4 | 3 | 4 |
| | Custom Size | 14.517 - 17.516 | 4 | 2 | 1 | 4 | 2 | 2 | 4 | 2 | 2 | 4 | 2 | 2 | 4 | 2 | 3 | 4 | 2 | 3 | 4 | 3 | 3 |
| | Custom Size | 13.017 - 14.516 | 4 | 2 | 1 | 4 | 2 | 2 | 4 | 2 | 2 | 4 | 2 | 2 | 4 | 2 | 3 | 4 | 2 | 3 | 4 | 2 | 3 |
| | Shortest | 11.864 - 13.016 | 4 | 2 | 1 | 4 | 2 | 2 | 4 | 2 | 2 | 4 | 2 | 2 | 4 | 2 | 3 | 4 | 2 | 3 | 4 | 2 | 3 |
| 75 | Tallest | 39.517 - 41.644 | 3 | 4 | 1 | 3 | 4 | 2 | 3 | 4 | 2 | 3 | 4 | 2 | 3 | 5 | 3 | 3 | 5 | 3 | 3 | 5 | 3 |
| | Custom Size | 38.517 - 39.516 | 3 | 4 | 1 | 3 | 4 | 2 | 3 | 4 | 2 | 3 | 4 | 2 | 3 | 5 | 3 | 3 | 5 | 3 | 3 | 5 | 3 |
| | Equal-lite | 35.517 - 38.516 | 3 | 3 | 1 | 3 | 3 | 2 | 3 | 4 | 2 | 3 | 4 | 2 | 3 | 5 | 3 | 3 | 5 | 3 | 3 | 5 | 3 |
| | Custom Size | 32.517 - 35.516 | 3 | 3 | 1 | 3 | 3 | 2 | 3 | 3 | 2 | 3 | 4 | 2 | 4 | 4 | 3 | 4 | 4 | 3 | 3 | 4 | 3 |
| | Standard Proview | 29.517 - 32.516 | 3 | 3 | 1 | 3 | 3 | 2 | 3 | 3 | 2 | 4 | 3 | 2 | 4 | 4 | 3 | 4 | 4 | 3 | 4 | 4 | 3 |
| | Custom Size | 26.517 - 29.516 | 4 | 3 | 1 | 4 | 3 | 2 | 4 | 3 | 2 | 4 | 3 | 2 | 4 | 3 | 3 | 4 | 4 | 3 | 4 | 4 | 3 |
| | Shortest | 25.516 - 26.516 | 4 | 3 | 1 | 4 | 3 | 2 | 4 | 3 | 2 | 4 | 3 | 2 | 4 | 3 | 3 | 4 | 3 | 3 | 4 | 3 | 3 |
| 84 | Equal-lite | 38.517 - 41.644 | 3 | 4 | 1 | 3 | 4 | 2 | 3 | 4 | 2 | 4 | 4 | 2 | 4 | 5 | 3 | 4 | 5 | 3 | 4 | 5 | 3 |
| | Custom Size | 35.517 - 38.516 | 4 | 3 | 1 | 4 | 3 | 2 | 4 | 3 | 2 | 4 | 4 | 2 | 4 | 4 | 3 | 4 | 5 | 3 | 4 | 4 | 3 |
| | Standard Proview | 33.818 - 35.516 | 4 | 3 | 1 | 4 | 3 | 2 | 4 | 3 | 2 | 4 | 3 | 2 | 4 | 4 | 3 | 4 | 4 | 3 | 4 | 4 | 3 |
| 91.78 | Tallest | ** - 41.644 | 4 | 4 | 1 | 4 | 4 | 2 | 4 | 4 | 2 | 4 | 4 | 2 | 4 | 4 | 3 | 4 | 5 | 3 | 4 | 5 | 3 |

**Anchor Group C**

| Window Buck Height (in) — Glass Types 9 - 16 Reinf. Level R3 | Bottom Sash Description for given Range @ Window Height Shown | Sash Height Range (in) | 24" Wide Jamb Above MR | 24" Wide Jamb Below MR | 24" Wide Header | 32" Wide Jamb Above MR | 32" Wide Jamb Below MR | 32" Wide Header | 36" Wide Jamb Above MR | 36" Wide Jamb Below MR | 36" Wide Header | 40" Wide Jamb Above MR | 40" Wide Jamb Below MR | 40" Wide Header | 48" Wide Jamb Above MR | 48" Wide Jamb Below MR | 48" Wide Header | 52-1/8" Wide Jamb Above MR | 52-1/8" Wide Jamb Below MR | 52-1/8" Wide Header | 54" Wide Jamb Above MR | 54" Wide Jamb Below MR | 54" Wide Header |
|---|---|---|---|---|---|---|---|---|---|---|---|---|---|---|---|---|---|---|---|---|---|---|---|
| 23.5 | Equal-lite | 11.394 | 1 | 2 | 1 | 1 | 2 | 2 | 1 | 2 | 2 | 1 | 2 | 2 | 1 | 2 | 2 | 1 | 2 | 2 | 1 | 2 | 2 |
| 28 | Standard Cottage | 14.517 - 15.870 | 1 | 2 | 1 | 1 | 2 | 2 | 1 | 2 | 2 | 1 | 2 | 2 | 1 | 3 | 2 | 1 | 3 | 2 | 1 | 3 | 2 |
| | Equal-lite | 11.583 - 14.516 | 1 | 2 | 1 | 1 | 2 | 2 | 1 | 2 | 2 | 1 | 2 | 2 | 2 | 2 | 2 | 2 | 3 | 2 | 2 | 3 | 2 |
| | Standard Proview | 11.377 - 11.582 | 2 | 2 | 1 | 2 | 2 | 2 | 2 | 2 | 2 | 2 | 2 | 2 | 2 | 2 | 2 | 2 | 2 | 2 | 2 | 2 | 2 |
| 37.375 | Tallest | 23.517 - 25.286 | 1 | 2 | 1 | 1 | 3 | 2 | 1 | 3 | 2 | 1 | 3 | 2 | 1 | 4 | 2 | 1 | 4 | 2 | 1 | 4 | 2 |
| | Standard Cottage | 20.958 - 23.516 | 1 | 2 | 1 | 1 | 2 | 2 | 1 | 3 | 2 | 1 | 3 | 2 | 2 | 3 | 2 | 2 | 4 | 2 | 2 | 4 | 2 |
| | Equal-lite | 17.517 - 20.957 | 2 | 2 | 1 | 2 | 2 | 2 | 2 | 3 | 2 | 2 | 3 | 2 | 2 | 3 | 2 | 2 | 3 | 3 | 2 | 3 | 3 |
| | Standard Proview | 14.517 - 17.516 | 2 | 2 | 1 | 2 | 2 | 2 | 2 | 2 | 2 | 2 | 2 | 2 | 2 | 3 | 3 | 2 | 3 | 3 | 2 | 3 | 3 |
| | Shortest | 11.377 - 14.516 | 2 | 2 | 1 | 2 | 2 | 2 | 2 | 2 | 2 | 2 | 2 | 2 | 2 | 2 | 3 | 3 | 2 | 3 | 2 | 2 | 3 |
| 44 | Tallest | 27.583 - 31.911 | 1 | 3 | 1 | 1 | 3 | 2 | 1 | 4 | 2 | 1 | 4 | 2 | 1 | 4 | 2 | 1 | 4 | 2 | 1 | 4 | 2 |
| | Custom Size | 26.517 - 27.582 | 2 | 3 | 1 | 2 | 3 | 2 | 2 | 3 | 2 | 2 | 3 | 2 | 2 | 4 | 2 | 2 | 4 | 2 | 2 | 4 | 2 |
| | Standard Cottage | 23.517 - 26.516 | 2 | 3 | 1 | 2 | 3 | 2 | 2 | 3 | 2 | 2 | 3 | 2 | 2 | 4 | 2 | 2 | 4 | 3 | 2 | 4 | 3 |
| | Equal-lite | 20.517 - 23.516 | 2 | 2 | 1 | 2 | 2 | 2 | 2 | 3 | 2 | 2 | 3 | 2 | 2 | 3 | 3 | 2 | 4 | 3 | 2 | 4 | 3 |
| | Standard Proview | 17.517 - 20.516 | 2 | 2 | 1 | 2 | 2 | 2 | 2 | 2 | 2 | 2 | 3 | 2 | 2 | 3 | 3 | 3 | 3 | 3 | 3 | 3 | 3 |
| | Custom Size | 14.517 - 17.516 | 3 | 2 | 1 | 3 | 2 | 2 | 3 | 2 | 2 | 3 | 2 | 2 | 3 | 3 | 3 | 3 | 3 | 3 | 3 | 3 | 3 |
| | Shortest | 11.377 - 14.516 | 3 | 2 | 1 | 3 | 2 | 2 | 3 | 2 | 2 | 3 | 2 | 2 | 3 | 2 | 3 | 3 | 2 | 3 | 3 | 2 | 3 |
| 48 | Tallest | 31.583 - 35.911 | 1 | 3 | 1 | 1 | 4 | 2 | 1 | 4 | 2 | 1 | 4 | 2 | 1 | 5 | 2 | 1 | 5 | 2 | 1 | 5 | 2 |
| | Standard Cottage | 26.517 - 31.582 | 2 | 3 | 1 | 2 | 3 | 2 | 2 | 3 | 2 | 2 | 4 | 2 | 2 | 4 | 2 | 2 | 5 | 3 | 2 | 5 | 3 |
| | Equal-lite | 20.517 - 26.516 | 2 | 3 | 1 | 2 | 3 | 2 | 2 | 3 | 2 | 2 | 3 | 2 | 3 | 4 | 3 | 3 | 4 | 3 | 3 | 4 | 3 |
| | Standard Proview | 17.517 - 20.516 | 3 | 2 | 1 | 3 | 2 | 2 | 3 | 2 | 2 | 3 | 3 | 2 | 3 | 3 | 3 | 3 | 3 | 3 | 3 | 3 | 3 |
| | Custom Size | 14.517 - 17.516 | 3 | 2 | 1 | 3 | 2 | 2 | 3 | 2 | 2 | 3 | 2 | 2 | 3 | 3 | 3 | 3 | 3 | 3 | 3 | 3 | 4 |
| | Custom Size | 12.517 - 14.516 | 3 | 2 | 1 | 3 | 2 | 2 | 3 | 2 | 2 | 3 | 2 | 2 | 3 | 2 | 3 | 4 | 3 | 4 | 4 | 3 | 4 |
| | Shortest | 11.377 - 12.516 | 3 | 2 | 1 | 3 | 2 | 2 | 3 | 2 | 2 | 3 | 2 | 3 | 3 | 2 | 3 | 4 | 2 | 4 | 4 | 2 | 4 |
| 49.625 | Tallest | 33.208 - 37.536 | 1 | 3 | 1 | 1 | 4 | 2 | 1 | 4 | 2 | 1 | 4 | 2 | 1 | 5 | 2 | 1 | 5 | 2 | 1 | 5 | 2 |
| | Standard Cottage | 26.517 - 33.207 | 2 | 3 | 1 | 2 | 3 | 2 | 2 | 4 | 2 | 2 | 4 | 2 | 2 | 5 | 3 | 2 | 5 | 3 | 2 | 5 | 3 |
| | Equal-lite | 23.517 - 26.516 | 2 | 3 | 1 | 2 | 3 | 2 | 2 | 3 | 2 | 2 | 3 | 2 | 2 | 4 | 3 | 3 | 4 | 3 | 3 | 4 | 3 |
| | Custom Size | 20.517 - 23.516 | 3 | 2 | 1 | 3 | 2 | 2 | 3 | 3 | 2 | 3 | 3 | 2 | 3 | 3 | 3 | 3 | 4 | 3 | 3 | 4 | 3 |
| | Standard Proview | 17.517 - 20.516 | 3 | 2 | 1 | 3 | 2 | 2 | 3 | 2 | 2 | 3 | 3 | 2 | 3 | 3 | 3 | 3 | 3 | 3 | 3 | 3 | 4 |
| | Custom Size | 14.517 - 17.516 | 3 | 2 | 1 | 3 | 2 | 2 | 3 | 2 | 2 | 3 | 2 | 2 | 3 | 3 | 3 | 4 | 3 | 4 | 4 | 3 | 4 |
| | Custom Size | 12.517 - 14.516 | 3 | 2 | 1 | 3 | 2 | 2 | 3 | 2 | 2 | 3 | 2 | 3 | 4 | 2 | 3 | 4 | 3 | 4 | 4 | 3 | 4 |
| | Shortest | 11.377 - 12.516 | 3 | 2 | 1 | 3 | 2 | 2 | 3 | 2 | 2 | 3 | 2 | 3 | 4 | 2 | 3 | 4 | 2 | 4 | 4 | 2 | 4 |
| 62 | Tallest | 36.517 - 41.644 | 2 | 4 | 1 | 2 | 4 | 2 | 2 | 4 | 2 | 2 | 5 | 2 | 2 | 6 | 3 | 3 | 6 | 3 | 2 | 6 | 3 |
| | Standard Cottage | 31.517 - 36.516 | 3 | 3 | 1 | 3 | 4 | 2 | 3 | 4 | 2 | 3 | 4 | 2 | 3 | 5 | 3 | 3 | 5 | 3 | 3 | 5 | 3 |
| | Equal-lite | 26.517 - 31.516 | 3 | 3 | 1 | 3 | 3 | 2 | 3 | 3 | 2 | 3 | 4 | 2 | 3 | 4 | 3 | 3 | 5 | 4 | 3 | 5 | 4 |
| | Standard Proview | 23.517 - 26.516 | 3 | 3 | 1 | 3 | 3 | 2 | 3 | 3 | 2 | 3 | 3 | 3 | 4 | 4 | 3 | 4 | 4 | 4 | 4 | 4 | 4 |
| | Custom Size | 20.517 - 23.516 | 3 | 2 | 1 | 3 | 2 | 2 | 3 | 3 | 2 | 4 | 3 | 3 | 4 | 3 | 3 | 4 | 4 | 4 | 4 | 4 | 4 |
| | Custom Size | 17.517 - 20.516 | 3 | 2 | 1 | 3 | 2 | 2 | 4 | 2 | 2 | 4 | 3 | 3 | 4 | 3 | 3 | 5 | 3 | 4 | 5 | 3 | 4 |
| | Custom Size | 14.517 - 17.516 | 4 | 2 | 1 | 4 | 2 | 2 | 4 | 2 | 2 | 4 | 2 | 2 | 4 | 3 | 3 | 5 | 3 | 4 | 5 | 3 | 4 |
| | Custom Size | 13.017 - 14.516 | 4 | 2 | 1 | 4 | 2 | 2 | 4 | 2 | 2 | 4 | 2 | 2 | 4 | 2 | 3 | 4 | 2 | 3 | 5 | 2 | 4 |
| | Shortest | 11.864 - 13.016 | 4 | 2 | 1 | 4 | 2 | 2 | 4 | 2 | 2 | 4 | 2 | 2 | 4 | 2 | 3 | 4 | 2 | 3 | 5 | 2 | 4 |
| 75 | Tallest | 39.517 - 41.644 | 3 | 4 | 1 | 3 | 4 | 2 | 3 | 4 | 2 | 3 | 5 | 2 | 3 | 6 | 3 | 3 | 6 | 3 | 3 | 6 | 3 |
| | Custom Size | 38.517 - 39.516 | 3 | 4 | 1 | 3 | 4 | 2 | 3 | 4 | 2 | 3 | 5 | 3 | 3 | 5 | 3 | 3 | 5 | 3 | 3 | 5 | 3 |
| | Equal-lite | 35.517 - 38.516 | 3 | 3 | 1 | 3 | 4 | 2 | 3 | 4 | 2 | 3 | 5 | 3 | 4 | 5 | 3 | 4 | 5 | 3 | 4 | 5 | 3 |
| | Custom Size | 32.517 - 35.516 | 3 | 3 | 1 | 3 | 3 | 2 | 3 | 4 | 2 | 4 | 4 | 3 | 4 | 5 | 3 | 4 | 5 | 4 | 4 | 5 | 4 |
| | Standard Proview | 29.517 - 32.516 | 3 | 3 | 1 | 3 | 3 | 2 | 4 | 4 | 2 | 4 | 4 | 3 | 4 | 5 | 3 | 4 | 5 | 4 | 4 | 5 | 4 |
| | Custom Size | 26.517 - 29.516 | 4 | 3 | 1 | 4 | 3 | 2 | 4 | 3 | 2 | 4 | 3 | 2 | 4 | 4 | 3 | 5 | 4 | 4 | 5 | 4 | 4 |
| | Shortest | 25.516 - 26.516 | 4 | 3 | 1 | 4 | 3 | 2 | 4 | 3 | 2 | 4 | 3 | 2 | 4 | 3 | 3 | 4 | 4 | 3 | 5 | 4 | 4 |
| 84 | Equal-lite | 38.517 - 41.644 | 3 | 4 | 1 | 3 | 4 | 2 | 4 | 4 | 2 | 4 | 5 | 3 | 4 | 6 | 3 | 4 | 5 | 3 | 4 | 5 | 3 |
| | Custom Size | 35.517 - 38.516 | 4 | 3 | 1 | 4 | 4 | 2 | 4 | 4 | 2 | 4 | 4 | 2 | 4 | 5 | 3 | 5 | 5 | 4 | 4 | 5 | 4 |
| | Standard Proview | 33.818 - 35.516 | 4 | 3 | 1 | 4 | 3 | 2 | 4 | 3 | 2 | 4 | 4 | 2 | 4 | 4 | 3 | 4 | 4 | 3 | 5 | 5 | 4 |
| 91.78 | Tallest | ** - 41.644 | 4 | 4 | 1 | 4 | 4 | 2 | 4 | 4 | 2 | 4 | 4 | 2 | 4 | 5 | 3 | 4 | 5 | 3 | 5 | 5 | 4 |

**Anchor Group D**

| Window Buck Height (in) — Glass Types 9 - 16 Reinf. Level R3 | Bottom Sash Description for given Range @ Window Height Shown | Sash Height Range (in) | 24" Wide Jamb Above MR | 24" Wide Jamb Below MR | 24" Wide Header | 32" Wide Jamb Above MR | 32" Wide Jamb Below MR | 32" Wide Header | 36" Wide Jamb Above MR | 36" Wide Jamb Below MR | 36" Wide Header | 40" Wide Jamb Above MR | 40" Wide Jamb Below MR | 40" Wide Header | 48" Wide Jamb Above MR | 48" Wide Jamb Below MR | 48" Wide Header | 52-1/8" Wide Jamb Above MR | 52-1/8" Wide Jamb Below MR | 52-1/8" Wide Header | 54" Wide Jamb Above MR | 54" Wide Jamb Below MR | 54" Wide Header |
|---|---|---|---|---|---|---|---|---|---|---|---|---|---|---|---|---|---|---|---|---|---|---|---|
| 23.5 | Equal-lite | 11.394 | 1 | 2 | 1 | 1 | 2 | 2 | 1 | 2 | 2 | 1 | 2 | 2 | 1 | 2 | 2 | 1 | 2 | 2 | 1 | 2 | 2 |
| 28 | Standard Cottage | 14.517 - 15.870 | 1 | 2 | 1 | 1 | 2 | 2 | 1 | 2 | 2 | 1 | 2 | 2 | 1 | 2 | 2 | 1 | 2 | 2 | 1 | 2 | 2 |
| | Equal-lite | 11.583 - 14.516 | 1 | 2 | 1 | 1 | 2 | 2 | 1 | 2 | 2 | 1 | 2 | 2 | 1 | 2 | 2 | 1 | 2 | 2 | 1 | 2 | 2 |
| | Standard Proview | 11.377 - 11.582 | 2 | 2 | 1 | 2 | 2 | 2 | 2 | 2 | 2 | 2 | 2 | 2 | 2 | 2 | 2 | 2 | 2 | 2 | 2 | 2 | 2 |
| 37.375 | Tallest | 23.517 - 25.286 | 1 | 2 | 1 | 1 | 2 | 2 | 1 | 2 | 2 | 1 | 2 | 2 | 1 | 3 | 2 | 1 | 3 | 2 | 1 | 3 | 2 |
| | Standard Cottage | 20.958 - 23.516 | 1 | 2 | 1 | 1 | 2 | 2 | 1 | 2 | 2 | 1 | 2 | 2 | 1 | 3 | 2 | 1 | 3 | 2 | 1 | 3 | 2 |
| | Equal-lite | 17.517 - 20.957 | 2 | 2 | 1 | 2 | 2 | 2 | 2 | 2 | 2 | 2 | 2 | 2 | 2 | 2 | 2 | 2 | 3 | 2 | 2 | 3 | 2 |
| | Standard Proview | 14.517 - 17.516 | 2 | 2 | 1 | 2 | 2 | 2 | 2 | 2 | 2 | 2 | 2 | 2 | 2 | 2 | 2 | 2 | 2 | 2 | 2 | 2 | 2 |
| | Shortest | 11.377 - 14.516 | 2 | 2 | 1 | 2 | 2 | 2 | 2 | 2 | 2 | 2 | 2 | 2 | 2 | 2 | 2 | 2 | 2 | 2 | 2 | 2 | 2 |
| 44 | Tallest | 27.583 - 31.911 | 1 | 3 | 1 | 1 | 3 | 2 | 1 | 3 | 2 | 1 | 3 | 2 | 1 | 3 | 2 | 1 | 3 | 2 | 1 | 3 | 2 |
| | Custom Size | 26.517 - 27.582 | 2 | 3 | 1 | 2 | 3 | 2 | 2 | 3 | 2 | 2 | 3 | 2 | 2 | 3 | 2 | 2 | 3 | 2 | 2 | 3 | 2 |
| | Standard Cottage | 23.517 - 26.516 | 2 | 3 | 1 | 2 | 3 | 2 | 2 | 3 | 2 | 2 | 3 | 2 | 2 | 3 | 2 | 2 | 3 | 2 | 2 | 3 | 2 |
| | Equal-lite | 20.517 - 23.516 | 2 | 2 | 1 | 2 | 2 | 2 | 2 | 2 | 2 | 2 | 2 | 2 | 2 | 3 | 2 | 2 | 3 | 2 | 2 | 3 | 2 |
| | Standard Proview | 17.517 - 20.516 | 2 | 2 | 1 | 2 | 2 | 2 | 2 | 2 | 2 | 2 | 2 | 2 | 2 | 2 | 2 | 2 | 3 | 2 | 2 | 3 | 2 |
| | Custom Size | 14.517 - 17.516 | 3 | 2 | 1 | 3 | 2 | 2 | 3 | 2 | 2 | 3 | 2 | 2 | 3 | 2 | 2 | 3 | 2 | 2 | 3 | 2 | 3 |
| | Shortest | 11.377 - 14.516 | 3 | 2 | 1 | 3 | 2 | 2 | 3 | 2 | 2 | 3 | 2 | 2 | 3 | 2 | 2 | 3 | 2 | 3 | 3 | 2 | 3 |
| 48 | Tallest | 31.583 - 35.911 | 1 | 3 | 1 | 1 | 3 | 2 | 1 | 3 | 2 | 1 | 3 | 2 | 1 | 3 | 2 | 1 | 3 | 2 | 1 | 3 | 2 |
| | Standard Cottage | 26.517 - 31.582 | 2 | 3 | 1 | 2 | 3 | 2 | 2 | 3 | 2 | 2 | 3 | 2 | 2 | 3 | 2 | 2 | 4 | 2 | 2 | 4 | 2 |
| | Equal-lite | 20.517 - 26.516 | 2 | 3 | 1 | 2 | 3 | 2 | 2 | 3 | 2 | 2 | 3 | 2 | 2 | 3 | 2 | 2 | 3 | 2 | 2 | 3 | 2 |
| | Standard Proview | 17.517 - 20.516 | 3 | 2 | 1 | 3 | 2 | 2 | 3 | 2 | 2 | 3 | 2 | 2 | 3 | 2 | 2 | 3 | 3 | 2 | 3 | 3 | 3 |
| | Custom Size | 14.517 - 17.516 | 3 | 2 | 1 | 3 | 2 | 2 | 3 | 2 | 2 | 3 | 2 | 2 | 3 | 2 | 2 | 3 | 2 | 3 | 3 | 2 | 3 |
| | Custom Size | 12.517 - 14.516 | 3 | 2 | 1 | 3 | 2 | 2 | 3 | 2 | 2 | 3 | 2 | 2 | 3 | 2 | 2 | 3 | 2 | 3 | 3 | 2 | 3 |
| | Shortest | 11.377 - 12.516 | 3 | 2 | 1 | 3 | 2 | 2 | 3 | 2 | 2 | 3 | 2 | 2 | 3 | 2 | 2 | 3 | 2 | 3 | 3 | 2 | 3 |
| 49.625 | Tallest | 33.208 - 37.536 | 1 | 3 | 1 | 1 | 3 | 2 | 1 | 3 | 2 | 1 | 3 | 2 | 1 | 3 | 2 | 1 | 4 | 2 | 1 | 4 | 2 |
| | Standard Cottage | 26.517 - 33.207 | 2 | 3 | 1 | 2 | 3 | 2 | 2 | 3 | 2 | 2 | 3 | 2 | 2 | 3 | 2 | 2 | 4 | 2 | 2 | 4 | 2 |
| | Equal-lite | 23.517 - 26.516 | 2 | 3 | 1 | 2 | 3 | 2 | 2 | 3 | 2 | 2 | 3 | 2 | 2 | 3 | 2 | 2 | 3 | 2 | 2 | 3 | 2 |
| | Custom Size | 20.517 - 23.516 | 3 | 2 | 1 | 3 | 2 | 2 | 3 | 2 | 2 | 3 | 2 | 2 | 3 | 3 | 2 | 3 | 3 | 2 | 3 | 3 | 3 |
| | Standard Proview | 17.517 - 20.516 | 3 | 2 | 1 | 3 | 2 | 2 | 3 | 2 | 2 | 3 | 2 | 2 | 3 | 2 | 2 | 3 | 3 | 3 | 3 | 3 | 3 |
| | Custom Size | 14.517 - 17.516 | 3 | 2 | 1 | 3 | 2 | 2 | 3 | 2 | 2 | 3 | 2 | 2 | 3 | 2 | 2 | 3 | 2 | 3 | 3 | 2 | 3 |
| | Custom Size | 12.517 - 14.516 | 3 | 2 | 1 | 3 | 2 | 2 | 3 | 2 | 2 | 3 | 2 | 2 | 3 | 2 | 2 | 3 | 2 | 3 | 3 | 2 | 3 |
| | Shortest | 11.377 - 12.516 | 3 | 2 | 1 | 3 | 2 | 2 | 3 | 2 | 2 | 3 | 2 | 2 | 3 | 2 | 2 | 3 | 2 | 3 | 3 | 2 | 3 |
| 62 | Tallest | 36.517 - 41.644 | 2 | 4 | 1 | 2 | 4 | 2 | 2 | 4 | 2 | 2 | 4 | 2 | 2 | 4 | 2 | 2 | 4 | 2 | 2 | 4 | 2 |
| | Standard Cottage | 31.517 - 36.516 | 3 | 3 | 1 | 3 | 3 | 2 | 3 | 3 | 2 | 3 | 3 | 2 | 3 | 4 | 2 | 3 | 4 | 2 | 3 | 4 | 2 |
| | Equal-lite | 26.517 - 31.516 | 3 | 3 | 1 | 3 | 3 | 2 | 3 | 3 | 2 | 3 | 3 | 2 | 3 | 3 | 2 | 3 | 3 | 3 | 3 | 3 | 3 |
| | Standard Proview | 23.517 - 26.516 | 3 | 3 | 1 | 3 | 3 | 2 | 3 | 3 | 2 | 3 | 3 | 2 | 3 | 3 | 2 | 3 | 3 | 3 | 3 | 3 | 3 |
| | Custom Size | 20.517 - 23.516 | 3 | 2 | 1 | 3 | 2 | 2 | 3 | 2 | 2 | 3 | 2 | 2 | 3 | 3 | 3 | 3 | 3 | 3 | 3 | 3 | 3 |
| | Custom Size | 17.517 - 20.516 | 3 | 2 | 1 | 3 | 2 | 2 | 3 | 2 | 2 | 3 | 2 | 2 | 3 | 2 | 3 | 3 | 3 | 3 | 3 | 3 | 3 |
| | Custom Size | 14.517 - 17.516 | 4 | 2 | 1 | 4 | 2 | 2 | 4 | 2 | 2 | 4 | 2 | 2 | 4 | 2 | 2 | 4 | 2 | 3 | 4 | 2 | 3 |
| | Custom Size | 13.017 - 14.516 | 4 | 2 | 1 | 4 | 2 | 2 | 4 | 2 | 2 | 4 | 2 | 2 | 4 | 2 | 2 | 4 | 2 | 3 | 4 | 2 | 3 |
| | Shortest | 11.864 - 13.016 | 4 | 2 | 1 | 4 | 2 | 2 | 4 | 2 | 2 | 4 | 2 | 2 | 4 | 2 | 2 | 4 | 2 | 2 | 4 | 2 | 3 |
| 75 | Tallest | 39.517 - 41.644 | 3 | 4 | 1 | 3 | 4 | 2 | 3 | 4 | 2 | 3 | 4 | 2 | 3 | 4 | 2 | 3 | 4 | 3 | 3 | 4 | 2 |
| | Custom Size | 38.517 - 39.516 | 3 | 4 | 1 | 3 | 4 | 2 | 3 | 4 | 2 | 3 | 4 | 2 | 3 | 4 | 2 | 3 | 4 | 3 | 3 | 4 | 3 |
| | Equal-lite | 35.517 - 38.516 | 3 | 3 | 1 | 3 | 3 | 2 | 3 | 3 | 2 | 3 | 3 | 2 | 3 | 4 | 2 | 3 | 4 | 3 | 3 | 4 | 3 |
| | Custom Size | 32.517 - 35.516 | 3 | 3 | 1 | 3 | 3 | 2 | 3 | 3 | 2 | 3 | 3 | 2 | 3 | 4 | 3 | 3 | 4 | 3 | 3 | 4 | 3 |
| | Standard Proview | 29.517 - 32.516 | 3 | 3 | 1 | 3 | 3 | 2 | 3 | 3 | 2 | 3 | 3 | 2 | 3 | 3 | 3 | 3 | 3 | 3 | 3 | 3 | 3 |
| | Custom Size | 26.517 - 29.516 | 4 | 3 | 1 | 4 | 3 | 2 | 4 | 3 | 2 | 4 | 3 | 2 | 4 | 3 | 2 | 4 | 3 | 3 | 4 | 3 | 3 |
| | Shortest | 25.516 - 26.516 | 4 | 3 | 1 | 4 | 3 | 2 | 4 | 3 | 2 | 4 | 3 | 2 | 4 | 3 | 2 | 4 | 3 | 3 | 4 | 3 | 3 |
| 84 | Equal-lite | 38.517 - 41.644 | 3 | 4 | 1 | 3 | 4 | 2 | 3 | 4 | 2 | 3 | 4 | 2 | 3 | 4 | 3 | 3 | 4 | 3 | 3 | 4 | 3 |
| | Custom Size | 35.517 - 38.516 | 4 | 3 | 1 | 4 | 3 | 2 | 4 | 3 | 2 | 4 | 3 | 2 | 4 | 3 | 2 | 4 | 4 | 3 | 4 | 4 | 3 |
| | Standard Proview | 33.818 - 35.516 | 4 | 3 | 1 | 4 | 3 | 2 | 4 | 3 | 2 | 4 | 3 | 2 | 4 | 3 | 2 | 4 | 3 | 2 | 4 | 3 | 3 |
| 91.78 | Tallest | ** - 41.644 | 4 | 4 | 1 | 4 | 4 | 2 | 4 | 4 | 2 | 4 | 4 | 2 | 4 | 4 | 2 | 4 | 4 | 2 | 4 | 4 | 3 |

SEE TABLES 7 & 8, SHEET 7 FOR DESIGN PRESSURES WHEN USING THIS TABLE.

** MIN. SASH HEIGHT = WINDOW BUCK HEIGHT - 50.136
(APPLIES TO ANY HEIGHT 91.78" OR LESS)

● GLASS TYPES 9 THROUGH 16 MAY NOT BE USED WITH J-CHANNEL OR INTEGRAL FIN FRAMES

NOTES:

1) FRAME DIMENSIONS ARE BUCK. "MR" = MEETING RAIL.

2) FOR SIZES NOT SHOWN, ROUND UP TO THE NEXT AVAILABLE WIDTH OR HEIGHT DIMENSION SHOWN ON THE TABLE.

3) REFER TO TABLES 2, SHEET 2 FOR ANCHOR GROUP DESCRIPTIONS.

ANTHONY LYNN MILLER LICENSE No. 58705 STATE OF FLORIDA PROFESSIONAL ENGINEER

3/13/20

A. LYNN MILLER, P.E.
P.E.# 58705

PGT

1070 TECHNOLOGY DRIVE
N. VENICE, FL 34275
(941)-480-1600

REGISTRATION #29296

Revision:
C) NO CHANGES THIS SHEET.
AK - 03/10/20

**PRODUCT REVISED**
as complying with the Florida Building Code
NOA-No. 20-0401.03
Expiration Date: 07/30/2025
By: Manuel Perez
Miami-Dade Product Control

| Description: | Drawn By: |
|---|---|
| ANCHOR QUANTITY TABLE | J ROSOWSKI |

| Title: | Date: |
|---|---|
| SINGLE HUNG WINDOW INSTALLATION - LM | 05/15/15 |

| Series/Model: | Scale: | Sheet: | Drawing No. | Rev: |
|---|---|---|---|---|
| SH-5500 | NTS | 10 OF 13 | MD-SH5500-01 | C |

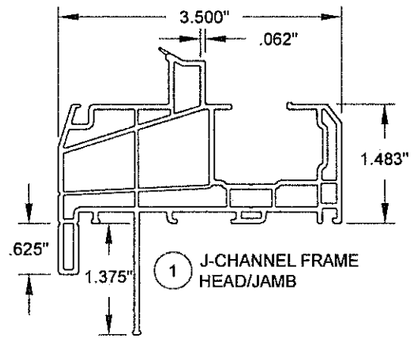

1 J-CHANNEL FRAME HEAD/JAMB

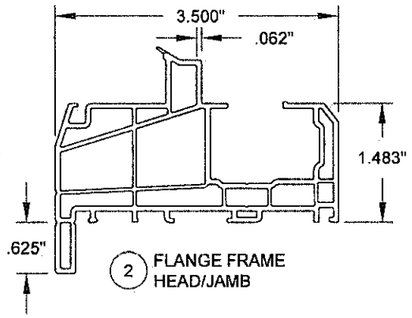

2 FLANGE FRAME HEAD/JAMB

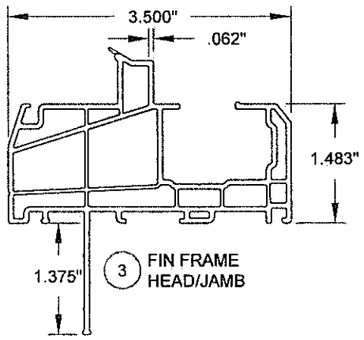

3 FIN FRAME HEAD/JAMB

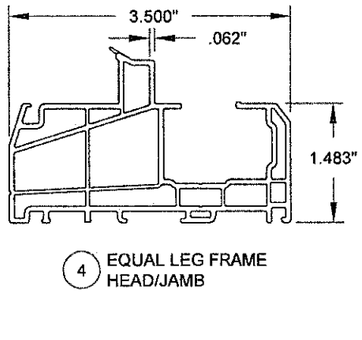

4 EQUAL LEG FRAME HEAD/JAMB

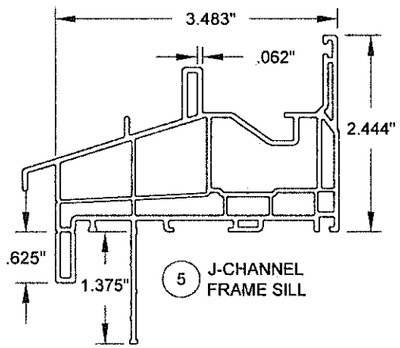

5 J-CHANNEL FRAME SILL

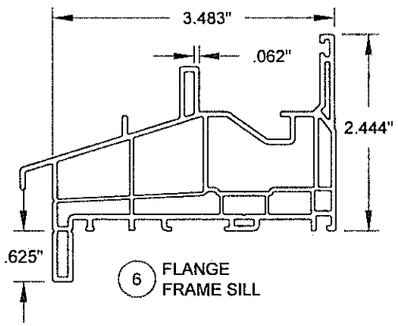

6 FLANGE FRAME SILL

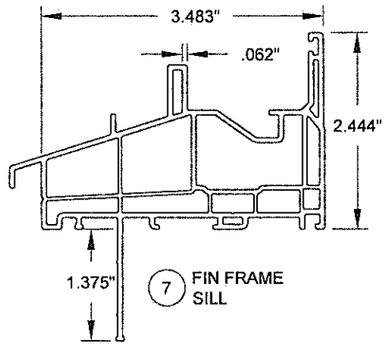

7 FIN FRAME SILL

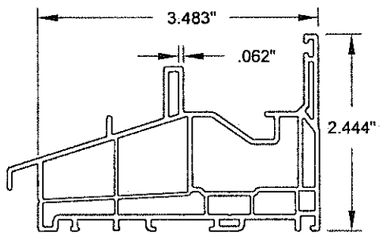

8 EQUAL LEG FRAME SILL

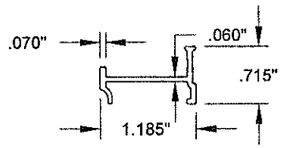

23 LIGHT SASH REINFORCEMENT

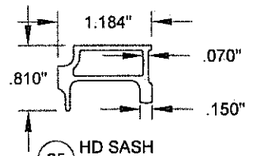

25 HD SASH REINFORCEMENT

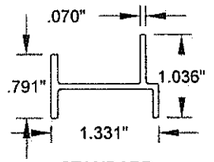

26 STANDARD MEETING RAIL REINFORCEMENT

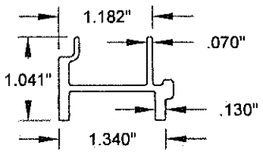

27 HD MEETING RAIL REINFORCEMENT

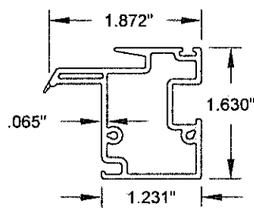

14 FIXED MEETING RAIL

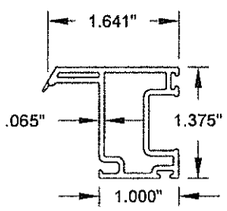

16 SASH RAIL

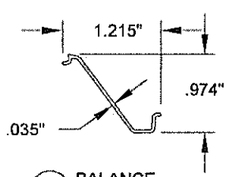

17 BALANCE COVER

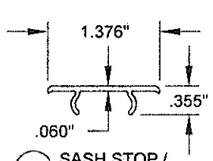

18 SASH STOP / SCREW COVER

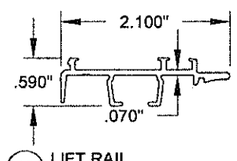

19 LIFT RAIL INTERLOCK

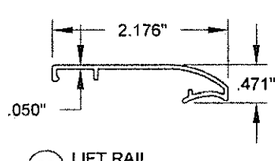

20 LIFT RAIL INTERLOCK COVER

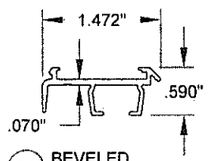

21 BEVELED INTERLOCK

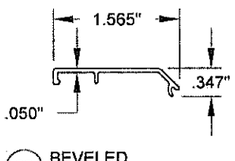

22 BEVELED INTERLOCK COVER

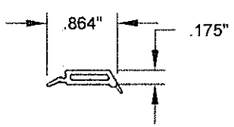

72 LAMI IG BEADING

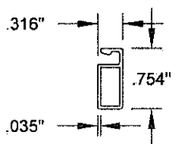

80 EXTRUDED SCREEN FRAME

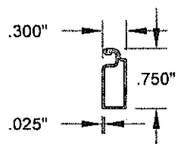

81 ROLLED SCREEN FRAME

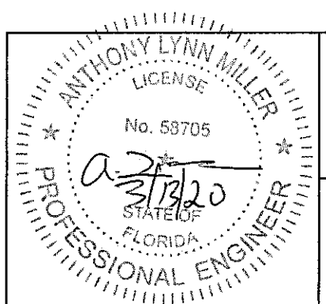


A. LYNN MILLER, P.E.
P.E.# 58705

1070 TECHNOLOGY DRIVE
N. VENICE, FL 34275
(941)-480-1600

REGISTRATION #29296

**PRODUCT REVISED**
**as complying with the Florida Building Code**
**NOA–No. 20-0401.03**
**Expiration Date: 07/30/2025**
**By:** Manuel Perez
**Miami-Dade Product Control**

| | | | | | |
|---|---|---|---|---|---|
| Revision: C) NO CHANGES THIS SHEET. AK - 03/10/20 | | | | | |
| Description: WINDOW EXTRUSIONS | | | | Drawn By: J ROSOWSKI | |
| Title: SINGLE HUNG WINDOW INSTALLATION - LM | | | | | Date: 05/15/15 |
| Series/Model: SH-5500 | Scale: NTS | Sheet: 11 OF 13 | Drawing No. MD-SH5500-01 | | Rev: C |

TABLE 12:

**Bill of Material**

| # | Part # | Description | Material |
|---|---|---|---|
| 1 | 620101 | Single Hung Frame Head & Jambs - J-Channel | PVC |
| 2 | 620102 | Single Hung Frame Head & Jambs - Flange | PVC |
| 3 | 620103 | Single Hung Frame Head & Jambs - Fin | PVC |
| 4 | 620104 | Single Hung Frame Head & Jambs - Equal Leg/Box | PVC |
| 5 | 620105 | SH/DH Frame Sill - J-Channel | PVC |
| 6 | 620106 | SH/DH Frame Sill - Flange | PVC |
| 7 | 620107 | SH/DH Frame Sill - Fin | PVC |
| 8 | 620108 | SH/DH Frame Sill - Equal Leg/Box | PVC |
| 14 | 620131 | Fixed Meeting Rail | PVC |
| 16 | 620129 | Sash Rail (Sides, Top & Bottom) | PVC |
| 17 | 620134 | Balance Cover | PVC |
| 18 | 620133 | Sash Stop/Screw Cover | PVC |
| 19 | 620156 | Pull Rail Interlock | 6005 T5 Al |
| 20 | 620144 | Pull Rail Interlock Cover | PVC |
| 21 | 620157 | Beveled Interlock | 6005 T5 Al |
| 22 | 620145 | Beveled Interlock Cover | PVC |
| 23 | 620150 | Light Sash Reinforcement | 6063 T6 Al |
| 25 | 620152 | HD Sash Reinforcement | 6063 T6 Al |
| 26 | 620153 | Standard Meeting Rail Reinforcement | 6005 T5 Al |
| 27 | 620154 | HD Meeting Rail Reinforcement | 6005 T5 Al |
| 30 | 61644 | Weatherstrip, .187" x .270" Fin Pile | |
| 31 | 6Q300 | Weatherstrip, .190" x .300" Foam Bulb | Flex PVC |
| 32 | 61719 | Weatherstrip, .187" x .220" PolyPile | |
| 33 | 61825 | Weatherstrip Plug, .220" Finseal | |
| 35 | 78X1MTTT | #8 x 1" Ph. PH SDS (Interlock Mounting Screw) | |
| 36 | 78X3THPX | #8 x 3" Ph. PH SMS (Meeting Rail Screw) | 410 SS |
| 37 | 71669SP | Meeting Rail Screw Support Plate | 6063 T6 Al |
| 38 | 720210 | Weep Hole Cover | PVC |
| 40 | 720XXXXX | Constant Force Balance | |
| 41 | | #8 x 3/4" Ph. FH SMS (Con. Force Balance Screw) | SS |
| 42 | | Spiral Balance | |
| 43 | 720205 | Spiral Balance Shoe | Nylon |
| 44 | 78X114FPAX | #8 x 1-1/4" Ph. FH SMS (Spiral Balance Screw) | 410 SS |

TABLE 12, CONT.:

**Bill of Material, cont.**

| # | Part # | Description | Material |
|---|---|---|---|
| 45 | 720197 | Auto Lock Mechanism | C Steel |
| 46 | 720198&9 | Sweep Lock | Cast Zinc |
| 47 | 720195&6 | Auto Lock Cover Assembly | Cast Zinc |
| 48 | 76X1180PTX | #6 x 1-1/8" Ph. FH SDS (Auto and Sweep Lock Screw) | SS |
| 49 | 720200 | Auto and Sweep Lock Keeper | Cast Zinc |
| 50 | ?76X34PPA | #6 x 3/4" PH. PH SDS (Keeper Screw) | SS |
| 51 | 420181 L/R | Beveled Tilt Latch Corner Key | PVC |
| 52 | 420182 L/R | Pull Rail Tilt Latch Corner Key | PVC |
| 53 | 7634PHFL | #6 x 3/4" Ph. FH SDS (Corner Key Screw) | SS |
| 54 | 420183 | Tilt Latch | PVC |
| 55 | 420184 | Tilt Latch Retainer | PVC |
| 56 | 720207 | 1" Tilt Latch Spring | SS |
| 57 | 420186 | Plastic Tilt Latch Finger Pull | PVC |
| 58 | 720192 | Metal Tilt Latch Finger Pull | Cast Zinc |
| 59 | 420180 | Pivot Bar Corner Key | PVC |
| 60 | 720206 | Pivot Bar | SS |
| 63 | 720191 | Sash Pull Handle | Cast Zinc |
| 64 | 720194 | Sash Pull Handle With Latch Assembly | Cast Zinc |
| 65 | 7834FPT | #8 x 3/4" Ph. FH SDS (Pull Handle Screw ) | SS |
| 66 | 420188 | Bottom Latch Strike Plate | Cast Zinc |
| 67 | ?7858B | #8 x 5/8" Ph. FH SMS (Strike Plate Screw) | SS |
| 72 | 720135 | Lami I.G. Bead | PVC |
| 74 | | Backbedding, GE 7700 or Dow 791 or Dow 983 | Silicone |
| 75 | 71646N | Setting Block (7/8" x 1" x 1/8"), 85 +/- 5 duro. | EPDM |
| 80 | 61012 | Extruded Screen Frame | Alum |
| 81 | 61011 | Roll-Formed Screen Frame | Alum |
| 82 | 7CKGLB21 | Screen Corner Key for Extruded Frame X 4 | PVC |
| 83 | 47042 | Screen Corner Key with Pull Ring X 2 | PVC |
| 84 | 47041 | Screen Corner Key without Pull Ring X 2 | PVC |
| 85 | 7CASPM | Tension Spring | SS |
| 86 | 61816C48 | Screen Cloth | Fiberglass |
| 87 | 61635/61614 | .140" Screen Spline (Machine/Hand Rolled) | Vinyl |

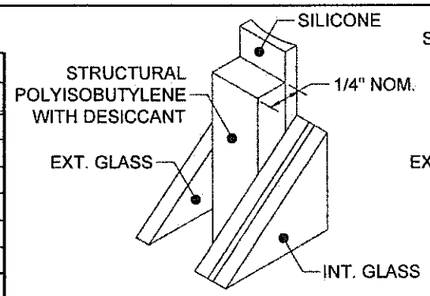


76 KODISPACE 4SG TPS

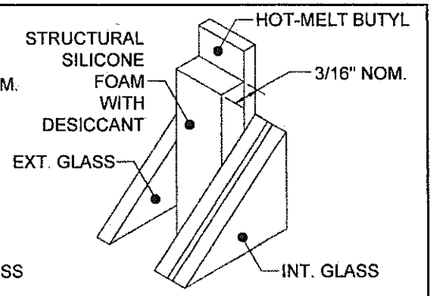


77 SUPER SPACER® NXT™

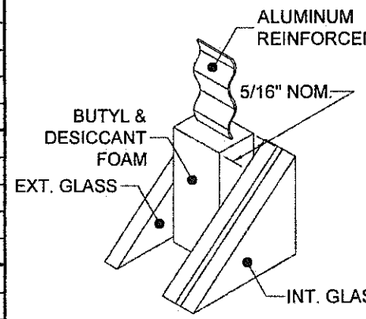


78 DURASEAL® SPACER

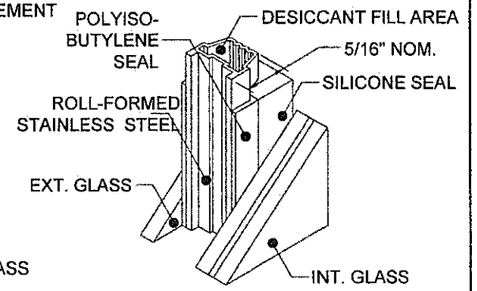


79 XL EDGE™ SPACER

| Part # | Description | Material |
|---|---|---|
| 76 | Kommerling 4SG TPS Spacer System | See this Sheet for Materials |
| 77 | Quanex Super Spacer nXT with Hot Melt Butyl | |
| 78 | Quanex Duraseal Spacer | |
| 79 | Cardinal XL Edge Spacer | |

REFERENCE TEST REPORTS: FTL-8717, 8968 & 8970

NOTES:

1) PVC BY ENERGI WINDOW AND DOOR PROFILES, LTD., TO BE LABELED FOR AAMA EXTRUDER CODE.
2) ITEMS # 9-13, 15, 24, 28, 29, 34, 39, 61, 62, 68-71, & 73 ARE NOT USED AND ARE NOT PART OF THIS APPROVAL.

ANTHONY LYNN MILLER LICENSE No. 58705 STATE OF FLORIDA PROFESSIONAL ENGINEER
3/13/20
A. LYNN MILLER, P.E.
P.E.# 58705

PGT®
1070 TECHNOLOGY DRIVE
N. VENICE, FL 34275
(941)-480-1600
REGISTRATION #29296

**PRODUCT REVISED**
**as complying with the Florida Building Code**
**NOA-No. 20-0401.03**
**Expiration Date: 07/30/2025**
**By:** Manuel Perez
**Miami-Dade Product Control**

Revision:
C) ADDED BACKBEDDING.
AK - 03/10/20

| | | | |
|---|---|---|---|
| Description: BILL OF MATERIAL (BOM) | | | Drawn By: J ROSOWSKI |
| Title: SINGLE HUNG WINDOW INSTALLATION - LM | | | Date: 05/15/15 |
| Series/Model: SH-5500 | Scale: NTS | Sheet: 12 OF 13 | Drawing No. MD-SH5500-01 / Rev: C |

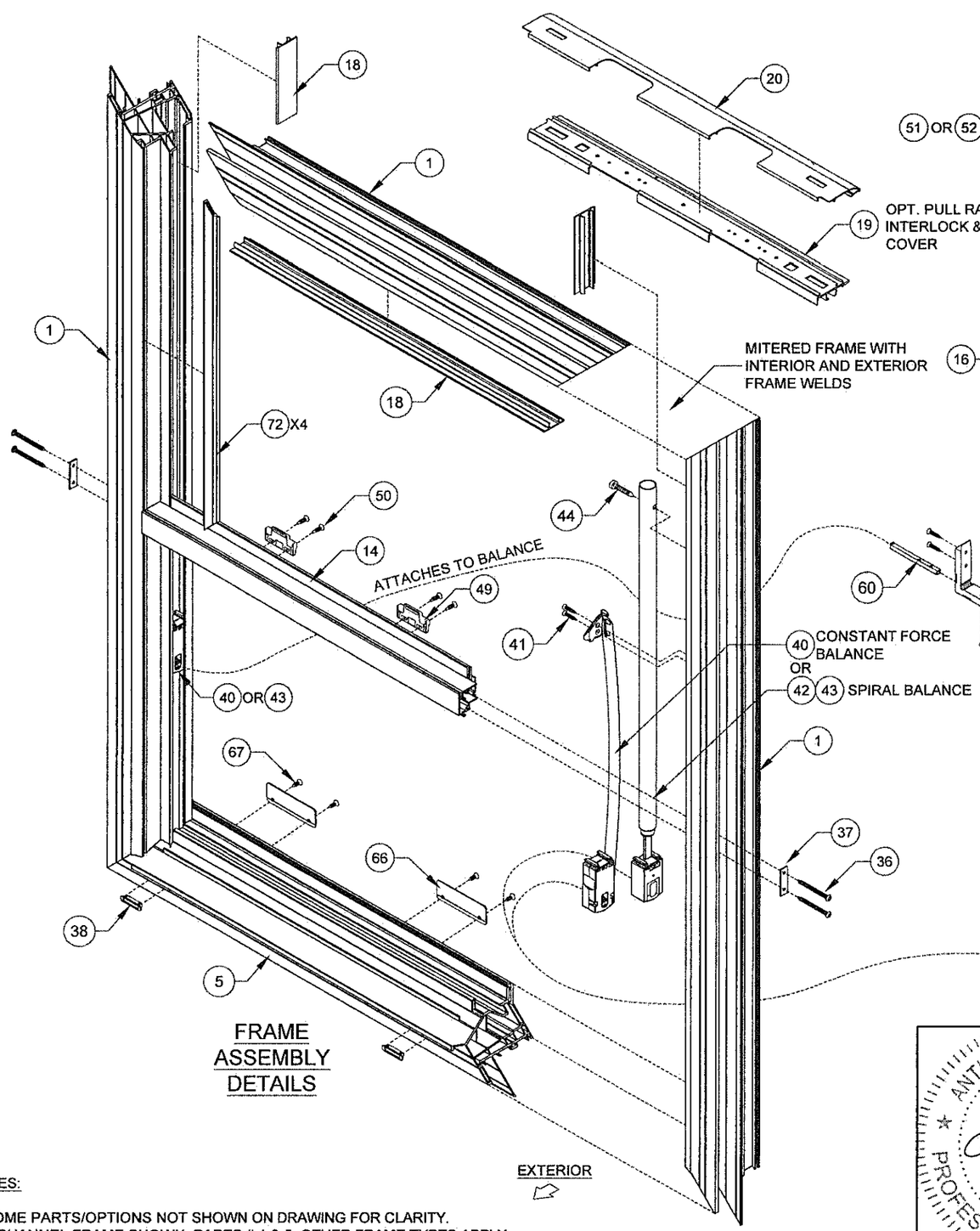


FRAME ASSEMBLY DETAILS

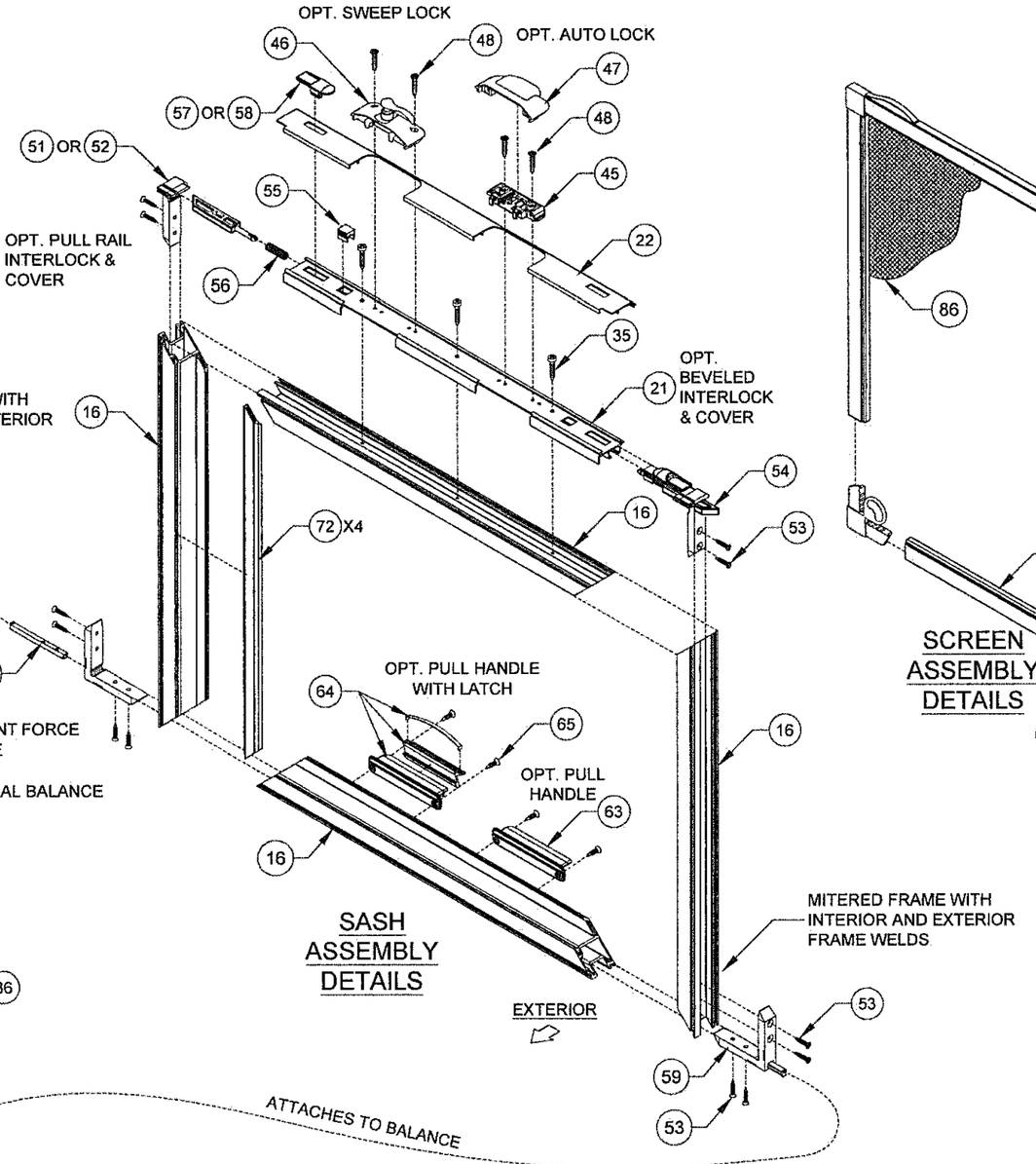


SASH ASSEMBLY DETAILS

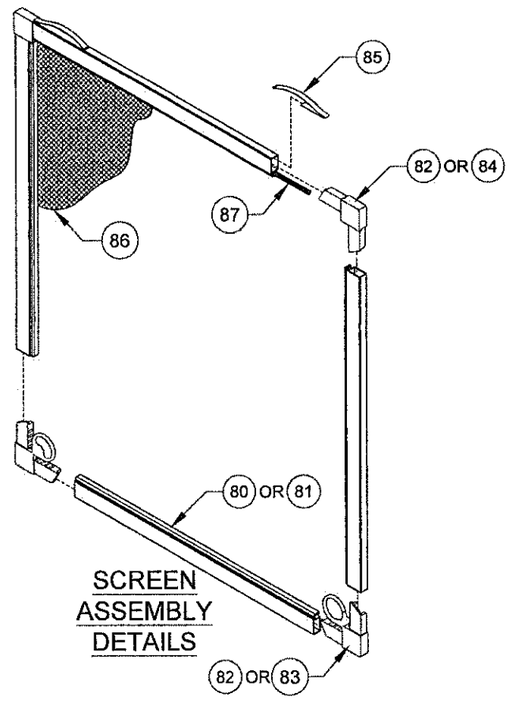


SCREEN ASSEMBLY DETAILS

NOTES:

1) SOME PARTS/OPTIONS NOT SHOWN ON DRAWING FOR CLARITY.
2) J-CHANNEL FRAME SHOWN, PARTS # 1 & 5. OTHER FRAME TYPES APPLY.
3) FOR REINFORCEMENT TYPES, SEE DETAILS ON SHEETS 6 & 7.
4) USE EITHER SASH TOP LOCKS OR SASH BOTTOM LOCKS.

ANTHONY LYNN MILLER LICENSE No. 58705 STATE OF FLORIDA PROFESSIONAL ENGINEER
3/13/20
A. LYNN MILLER, P.E.
P.E.# 58705

1070 TECHNOLOGY DRIVE
N. VENICE, FL 34275
(941)-480-1600
REGISTRATION #29296

**PRODUCT REVISED**
as complying with the Florida Building Code
NOA-No. 20-0401.03
Expiration Date: 07/30/2025
By: Manuel Perez
Miami-Dade Product Control

Revision:
C) NO CHANGES THIS SHEET.
AK - 03/10/20

Description: EXPLODED ASSEMBLY
Drawn By: J ROSOWSKI
Title: SINGLE HUNG WINDOW INSTALLATION - LM
Date: 05/15/15
Series/Model: SH-5500
Scale: NTS
Sheet: 13 OF 13
Drawing No.: MD-SH5500-01
Rev: C